RECOMMENDED GOOD PRACTICE

THERMAL OXIDATION OF WASTE STREAMS IN BLACK LIQUOR RECOVERY BOILERS

October 2026

THE BLACK LIQUOR RECOVERY BOILER ADVISORY COMMITTEE

Notice and Disclaimer of Liability Concerning Recommended Guidelines and Procedures

BLRBAC brings together volunteers from operating companies, manufacturers and insurance companies representing varied viewpoints and interests to achieve consensus on Guidelines and Recommended Practices for the safe operation of recovery boilers. While BLRBAC facilitates this process, it does not independently test, evaluate or verify the accuracy of any information or the soundness of any judgments contained in its Recommended Guidelines and Procedures.

BLRBAC disclaims liability for any personal injury, property or other damages of any nature whatsoever, whether special, indirect, consequential or compensatory, directly or indirectly resulting from the publication, use of, or reliance on BLRBAC Guidelines and Recommended Practices. BLRBAC also makes no guaranty or warranty as to the accuracy or completeness of any information published herein.

In issuing and making this document available, BLRBAC is not undertaking to render professional or other services of or on behalf of any person or entity. Nor is BLRBAC undertaking to perform any duty owed by any person or entity to someone else. Anyone using BLRBAC Guidelines and Recommended Practices should rely on his or her own independent judgment or, as appropriate, seek the advice of a competent professional in determining the exercise of reasonable care in any given circumstance.

Users of BLRBAC Guidelines and Recommended Practices should consult applicable federal, state and local laws and regulations relating to the safe manufacture and operation of recovery boilers. BLRBAC does not, by the publication of its Guidelines and Recommended Practices intend to urge action that is not in compliance with applicable laws, and its publications may not be construed as doing so.

Table of Contents

CHAPTER 1 INTRODUCTION 1

CHAPTER 2 DEFINITIONS AND ABBREVIATIONS 3

CHAPTER 3 MAJOR CONSIDERATIONS 6

3.1 INTRODUCTION 6
3.2 EXPLOSION 6
3.3 TURPENTINE HAZARDS 8
3.4 EMERGENCY SHUTDOWN PROCEDURE (ESP) 8
3.5 CORROSION 9
3.6 THE EFFECT OF SULFUR INPUT AND SOLIDS CONCENTRATION ON SO_2 9
3.7 THE EFFECT OF SOG INPUT ON NOX EMISSIONS 10
3.8 HEALTH CONSIDERATIONS 11
3.9 SYSTEM COMPLEXITY 11
3.10 INTEGRATION/RELIABILITY OF TRANSPORT SYSTEMS 12
3.11 INPUT 12
3.12 CONDITION OF THE RECOVERY BOILER 13

CHAPTER 4 GUIDELINES FOR THERMAL OXIDATION OF DNCG 14

4.1 INTRODUCTION 14
4.1.1 Safety 14
4.1.2 Sources 14
4.1.3 Recovery Boiler Introduction System 15
4.2 COLLECTION AND TRANSFER OF DNCG 16
4.2.1 Collection of DNCG 16
4.2.2 Chip Bin Gas 16
4.2.3 Dissolving Tank Vent Gases 16
4.2.4 Black Liquor Oxygen (BLOX) Reactor Vent Gas 17
4.2.5 Crude Tall Oil (CTO) Acidulation Vent Gas 17
4.2.7 DNCG Piping System and Auxiliary Equipment 19
4.3 MONITORING AND CONTROL 20
4.4 SAFETY SYSTEMS 20
4.4.1 Permissive Starting Logic - DNCG 21
4.4.2 Protective Tripping Logic - DNCG 21
4.5 PERSONNEL SAFETY 21

CHAPTER 5 GUIDELINES FOR THERMAL OXIDATION OF CNCG AND SOG 29

5.1 INTRODUCTION 29
5.1.1 Safety 29
5.1.2 Sources 29
5.1.3 Dedicated Burner 30
5.1.4 The Recovery Boiler as Primary Control Device 30
5.2 COLLECTION AND TRANSFER OF CNCG AND SOG 30
5.2.1 CNCG 31
5.2.2 SOG 33
5.2.3 CNCG and SOG Piping System and Auxiliary Equipment 34
5.3 THERMAL OXIDATION 35
5.3.1 Burner 35
5.3.2 Continuous Igniter 36
5.3.3 Combustion Air 37
5.4 SAFETY SYSTEM 37

5.4.1 Permissive Starting Logic - CNCG *37*
5.4.2 Protective Tripping Logic - CNCG *38*
5.4.3 Permissive Starting Logic - SOG *38*
5.4.4 Protective Tripping Logic - SOG *39*
5.5 PERSONNEL SAFETY 39
5.6 SYSTEM DESCRIPTION AND OPERATION 40
5.6.1 Description *40*
5.6.2 Operation *41*

CHAPTER 6 LIQUID WASTE STREAMS BLENDED WITH BLACK LIQUOR 54

6.1 INTRODUCTION 54
6.2 METHANOL 56
6.3 SECONDARY SLUDGE 61
6.4 SOAP 63
6.5 SPENT ACID FROM CLO_2 AND TALL OIL BRINE 69
6.6 TALL OIL 74
6.7 TURPENTINE 79

CHAPTER 7 GUIDELINES FOR THERMAL OXIDATION OF LIQUID WASTE STREAMS IN DEDICATED BURNERS 85

7.1 INTRODUCTION 85
7.2 SAFETY 86
7.2.1 System Safety *86*
7.2.2 Personnel Safety *86*
7.3 DESCRIPTIONS OF LIQUID WASTE STREAMS EXPECTED TO BE FIRED IN DEDICATED BURNERS 88
7.3.1 Methanol *88*
7.3.2 Turpentine and Red Oil *89*
7.3.3 Crude Tall Oil *90*
7.4 RECOMMENDED WASTE STREAM CHARACTERISTICS 91
7.4.1 Basic Acceptable Characteristics for Combustion in a Dedicated Burner *91*
7.4.2 Characteristics of Class A Waste Streams *91*
7.4.3 Characteristics of Class B Waste Streams *92*
7.4.4 Characteristics of Class C Waste Streams *92*
7.5 DEDICATED BURNERS FOR THERMAL OXIDATION 92
7.5.1 All Dedicated Burners *92*
7.5.2 Burners Firing Class A Streams *93*
7.5.3 Burners Firing Class B Streams *93*
7.6 PROTECTIVE STARTING AND TRIPPING LOGIC 93

CHAPTER 8 GUIDELINES FOR THERMAL OXIDATION OF CHIP BIN NCG 95

8.1 INTRODUCTION 95
8.1.1 Safety *95*
8.1.2 Flammability of CBNCG *95*
8.2 COLLECTION AND TRANSFER OF CBNCG 97
8.2.1 CBNCG Conditioning System *97*
8.2.2 Recovery Boiler Introduction System *98*
8.2.3 Chip Bin NCG Transfer System *101*
8.2.4 CBNCG Piping System and Auxiliary Equipment *104*
8.3 MONITORING AND CONTROL 105
8.4 SAFETY SYSTEM 105
8.4.1 Permissive Starting Logic – CBNCG – Fan Delivery *105*
8.4.2 Protective Tripping Logic – CBNCG – Fan Delivery *106*
8.4.3 Permissive Starting Logic – CBNCG – Steam Ejector Delivery *112*
8.4.4 Protective Tripping Logic – CBNCG – Steam Ejector Delivery *112*
8.5 PERSONNEL SAFETY 118

APPENDIX A DOCUMENT REVISION HISTORY 119

Table of Figures

FIGURE 1 DNCG TRANSFER SYSTEM. 23
FIGURE 2 DNCG PERMISSIVE STARTING LOGIC 24
FIGURE 3 DNCG INJECTION PROTECTIVE TRIPPING LOGIC. 26
FIGURE 4 DNCG TRANSFER SYSTEM OF DISSOLVING TANK VENT. 28
FIGURE 5 CNCG AND SOG TRANSFER SYSTEMS. 44
FIGURE 6 CNCG & SOG SINGLE BURNER FOR THERMAL OXIDATION IN RECOVERY BOILER. 45
FIGURE 7 WASTE SYSTEM BURNER PERMISSIVE STARTING LOGIC FOR CNCG 46
FIGURE 8 WASTE STREAM BURNER PROTECTIVE TRIPPING LOGIC FOR CNCG. 48
FIGURE 9 WASTE STREAM BURNER PERMISSIVE STARTING LOGIC FOR SOG. 50
FIGURE 10 WASTE STREAM BURNER PROTECTIVE TRIPPING LOGIC FOR SOG. 52
FIGURE 11 PERMISSIVE STARTING LOGIC FOR METHANOL. 59
FIGURE 12 TRIPPING LOGIC FOR METHANOL. 60
FIGURE 13 PERMISSIVE STARTING LOGIC FOR SOAP. 668
FIGURE 13A SOAP BURNING DIAGRAM. 609
FIGURE 14 TRIPPING LOGIC FOR SOAP. 70
FIGURE 15 PERMISSIVE STARTING LOGIC FOR SPENT ACID WHEN ADDED AFTER POINT OF FINAL CONCENTRATION. 72
FIGURE 16 TRIPPING LOGIC FOR SPENT ACID WHEN ADDED AFTER POINT OF FINAL CONCENTRATION. 73
FIGURE 17 PERMISSIVE STARTING LOGIC FOR TALL OIL. 77
FIGURE 18 TRIPPING LOGIC FOR TALL OIL. 78
FIGURE 19 PERMISSIVE STARTING LOGIC FOR TURPENTINE. 83
FIGURE 20 TRIPPING LOGIC FOR TURPENTINE. 84
FIGURE 21 EXAMPLE - CBNCG VENT CONDENSING SYSTEM. 100
FIGURE 22 EXAMPLE - CBNCG FAN DELIVERY SYSTEM. 102
FIGURE 23 EXAMPLE - CBNCG EJECTOR DELIVERY SYSTEM. 103
FIGURE 24 CBNCG FAN DELIVERY PERMISSIVE STARTING LOGIC. 107
FIGURE 25 CBNCG FAN DELIVERY TRIPPING LOGIC. 109
FIGURE 26 CBNCG STEAM EJECTOR DELIVERY PERMISSIVE STARTING LOGIC. 113
FIGURE 27 CBNCG STEAM EJECTOR DELIVERY TRIPPING LOGIC. 115

Table of Tables

TABLE 1 EXPLOSION LIMITS OF NCG CONSTITUENTS. 6
TABLE 2 HEATS OF COMBUSTION FOR NCG COMPONENTS. 13
TABLE 3 LOGIC EXPLANATION CHART FOR FIGURE 2 - DNCG INJECTION PERMISSIVE STARTING LOGIC 25
TABLE 4 LOGIC EXPLANATION CHART FOR FIGURE 3 - INJECTION PROTECTIVE TRIPPING LOGIC 27
TABLE 5 VALVE STATUS AND ACTIONS AT MFT AND ESP; FIGURES 5 AND 6. 43
TABLE 6 LOGIC EXPLANATION CHART FOR FIGURE 7 PERMISSIVE STARTING LOGIC - WASTE STREAMS BURNER 47
TABLE 7 LOGIC EXPLANATION CHART FOR FIGURE 8 PROTECTIVE TRIPPING LOGIC - WASTE STREAM BURNER 48
TABLE 8 LOGIC EXPLANATION CHART FOR FIGURE 9 PERMISSIVE STARTING LOGIC FOR SOG - WASTE STREAMS BURNER 51
TABLE 9 LOGIC EXPLANATION CHART FOR FIGURE 10 PROTECTIVE TRIPPING LOGIC FOR SOG - WASTE STREAM BURNER 53
TABLE 10 RISK FACTORS AFFECTING THE FLAMMABILITY OF CHIP BIN NCG. 96
TABLE 11 EXPLANATION CHART FOR CBNCG INJECTION PERMISSIVE STARTING LOGIC - FAN DELIVERY FOR FIGURE 24 108
TABLE 12 EXPLANATION CHART FOR CBNCG INJECTION PROTECTIVE TRIPPING LOGIC - FAN DELIVERY FOR FIGURE 25 110

TABLE 13 EXPLANATION CHART FOR CBNCG INJECTION PERMISSIVE STARTING LOGIC - STEAM EJECTOR DELIVERY FOR FIGURE 26.....114
TABLE 14 EXPLANATION CHART FOR CBNCG INJECTION PROTECTIVE TRIPPING LOGIC - STEAM EJECTOR DELIVERY FOR FIGURE 27.....116

CHAPTER 1 INTRODUCTION

The black liquor recovery boiler presents problems of operation and safety that far exceed those of the conventional power boiler or other forms of combustion equipment that can be used for the thermal oxidation of waste streams. The recovery boiler is primarily a chemical recovery process unit in which organic materials in the black liquor are burned while the oxidized sulfur compounds of sodium and potassium are reduced and drained as molten smelt from the furnace bottom. At the same time, the heat released is used for generation of steam for power and process.

This document is intended to address concerns of the industry relating to safe thermal oxidation of waste streams in recovery boilers. "Waste streams" for this document are produced in the pulping process. The major waste stream is noncondensible gases (NCG), which are gases that contain reduced sulfur compounds from the digester and evaporator operations and are a source of odor. The following list is representative of the pulping process waste streams that are addressed:

- Dilute Noncondensible Gas (DNCG)
- Concentrated Noncondensible Gas (CNCG)
- Stripper Off Gas (SOG)
- Chip Bin Noncondensible Gas (CBNCG)
- Dissolving Tank Vent Gas (DTVG)
- Soap
- Methanol
- Turpentine
- Tall Oil
- Spent Acid
- Secondary Sludge

The principal process benefit to thermally oxidizing these streams in the recovery furnace is that the sulfur content of the streams can be retained within the process rather than be discharged to the surroundings. While most of the heat for the chemical recovery process is from the burning of black liquor, the waste streams may introduce additional heat and moisture into the furnace.

The thermal oxidation of waste streams in the recovery boiler increases the complexity of the operation as well as the potential safety risks in the recovery boiler building. This *Recommended Good Practice for the Thermal Oxidation of Waste Streams in Black Liquor Recovery Boilers* should be reviewed regarding equipment, safety systems and operating procedures for the design and operation of waste stream systems installed on the recovery boiler. Information included in this Recommended Good Practice can assist in minimizing the risk for the operating company that chooses to thermally oxidize any of these streams in the recovery boiler.

The complexity of the chemical recovery process and the severe environment combine to present a formidable challenge to operators of recovery boilers. The difficulty of the operation is increased if the waste streams are thermally oxidized in the recovery furnace. Further, there is a potential to degrade the environment in the recovery boiler building with the introduction of waste streams. In most cases, the recovery boiler operators must depend on the thoroughness of their training, their own personal senses and reactions, and instrumentation to aid in safe operation. Many times the operators are forced to evaluate a situation rapidly, and it is hoped, correctly, without having all of the facts. The burden on the recovery boiler operator is truly great and the industry has realized that they must have help, guidance and proper tools to promote safety and boiler availability. These take on increased importance in a mill that introduces waste streams into the recovery boiler.

The Waste Streams Subcommittee was formed in 1997 to evaluate the experience with thermal oxidation of liquid and gaseous waste streams in the recovery boiler. The industry experience level had evolved at that time with a substantial number of recovery boilers thermally oxidizing both DNCG and CNCG. The considerable experience with burning NCG in other control devices, such as bark boilers and lime kilns, had resulted in substantial advances in technology and operation of collections systems and combustion of NCG. After evaluation of the industry experience, the Waste Streams Subcommittee determined with the agreement of the Executive Committee that there was justification to develop recommended BLRBAC guidelines for using the recovery boiler as an emission control device. The result is this *Recommended Good Practice for Thermal Oxidation of Waste Streams in Black Liquor Recovery Boilers*.

The following publications are additional references concerning thermal oxidation of waste streams in recovery boilers, and they were part of the foundation upon which this document was prepared.

Soda House Committee of the Swedish Steam Users Association:

- *Guidelines Regarding Equipment and Safety Systems for Destruction of Concentrated NCG, Methanol and Turpentine in Recovery Boilers*, Publication No. B16.
- *Destruction by Means of Combustion of LVHC Gases, Methanol and Turpentine in Black Liquor Recovery Boilers*, Publication No. C9.
- *Recommendations Concerning Equipment and Safety Systems for Oil and Gas Firing in Black Liquor Recovery Boilers*, Publication No. B13.

Finnish Recovery Boiler Association:

- *Recommended Procedure for Incineration of Noncondensible Gases*.

FM Global:

- *Property Loss Prevention Data Sheet 6-21, Chemical Recovery Boilers*.
- *Property Loss Prevention Data Sheet 6-13, Waste Fuel-Fired Boilers*.

CHAPTER 2 DEFINITIONS AND ABBREVIATIONS

Terms that are used in the *Recommended Good Practice* are defined. Definitions where applicable are used as they appear in the Final Pulp and Paper Cluster Rule (63 FR 18504-18751).

Chip bin: A vessel used for the purpose of preheating or pretreating wood chips prior to the digester, using flash steam from the digester or live steam.

Chip bin non-condensible gas (CBNCG) – Gas containing a concentration of sulfur compounds and/or turpentine, methanol and other hydrocarbons that is generated from the pre-steaming of chips prior to entering the digester. As a consequence, this source of NCG will normally be high in oxygen content and can, under upset chip bin operation, exceed 100% LEL.

Control device or **combustion device:** An individual unit of equipment, including but not limited to, a thermal oxidizer, lime kiln, recovery furnace, process heater, or boiler, used for the thermal oxidation of organic hazardous air pollutant vapors or combustible liquids extracted in the process, such as, turpentine or methanol. These guidelines will only take into consideration the recovery furnace as the control device.

Concentrated noncondensible gas (CNCG): Gas containing a concentration of sulfur compounds and/or turpentine, methanol and other hydrocarbons that is ideally above the upper explosion limit (UEL), frequently referred to as low volume, high concentration gases (LVHC). The CNCG definition is exclusive of volume.

CNCG system: The gas collection and transport system used to convey gases from the CNCG sources to the recovery boiler, or other combustion device. Sources are closed systems (no air intrusion) and may include digesters, turpentine recovery, evaporators, and steam stripper systems.

Dilute noncondensible gas (DNCG): Gas containing a concentration of sulfur compounds that is below the lower explosion limit (LEL), frequently referred to as high volume, low concentration Gases (HVLC). The DNCG definition is exclusive of volume.

DNCG system: The gas collection and transport system used to convey gases from the DNCG system to the recovery boiler, or other combustion device. Sources may include pulp washing, knotter, screen, decker, and oxygen delignification systems, black liquor storage tanks, and boiler house chemical ash mix tank.

Dissolving tank vent gas (DTVG): The exhaust from the dissolving tank, considered a DNCG. This gas is primarily air and steam with particulate, green liquor droplets, and other compounds.

Dissolving tank vent gas system: The gas collection, cleanup and transport system used to convey gases from the dissolving tank to the furnace.

ESP: Emergency shutdown procedure (ESP) - A shutdown procedure that must be performed whenever any amount of water is known or suspected to be entering the furnace and cannot be stopped immediately.

Flame propagation: The velocity at which a flame will travel through a flammable vapor.

Flammable: Refers to a fuel, which could be gaseous, liquid, or solid, that is explosive, easy to ignite and/or burns quickly.

Flash steam: Steam derived from the flashing of hot, pressurized liquor extracted from the digester. Flash steam is used for pre-steaming chips in the digester steaming vessel and in the chip bin and is rich in turpentine, methanol, and TRS.

High volume, low concentration (HVLC): Another name for DNCG.

Lower explosion limit (LEL): A concentration by volume of a compound in air below which the mixture will not catch on fire. Also called lower flammability limit (LFL).

Low volume, high concentration (LVHC): Another name for CNCG.

Maximum continuous rating (MCR): The maximum design/nameplate steaming rate or liquor firing rate for a recovery boiler.

Methanol (CH_30H): A by-product created during the pulping and bleaching process by the degradation of the methoxy groups on hemicellulose and lignin. Methanol is flammable and provides positive net Btu value. Methanol is water soluble and may be found in solution or as a vapor.

Noncondensible gas (NCG): Refers to the gases containing sulfur and/or organic compounds, i.e., CNCG, DCNG, and SOG. Some mills refer to NCG as TRS gases.

Recovery boiler building (or area): The boundary used within a mill to identify the areas around a recovery boiler that are affected by an ESP. Personnel are not to enter these areas until after an ESP is completed and entry is permitted.

Red oil: A mixture of terpenes and TRS compounds. “Red oil” is highly contaminated turpentine with a lower flash point and a higher sulfur content. For these guidelines, red oil should be treated as turpentine.

Safety shutoff valve (SSV): Safety shutoff valve.

Secondary sludge: The waste residue resulting from the biological treatment of wastewater.

Soap: A by-product formed during the pulping process by the reaction of alkali and fatty wood acids.

Spent acid: The aqueous solution by-product from the acidulation of tall oil soap to tall oil, usually consisting primarily of sodium sulfate in water solution. ClO_2 spent acid is the effluent from a ClO_2 generator. The term "spent acid" is used to refer to both tall oil brine and ClO_2 spent acid.

Stripper off-gas (SOG): Methanol, reduced sulfur gases and other volatiles removed by a steam stripping and distillation process from digester and condenser condensates (this definition deviates from the Cluster Rule definition).

Tall oil: A mixture of fatty acids, rosin and neutral materials resulting from the acidulation of soap skimmings from kraft black liquor.

Total reduced sulfur (TRS): The total sulfur compounds existing in gaseous sulfate emissions, condensate, and waste waters that are the result of the reduction of sulfur by the pulping process. TRS typically includes hydrogen sulfide (H_2S), methyl mercaptan (CH_3SH), dimethyl sulfide (CH_3SCH_3), and dimethyl disulfide (CH_3SSCH_3).

Upper explosion limit (UEL): A concentration by volume of a compound in air above which the mixture will not catch on fire. Also called upper flammability limit (UFL).

Waste stream(s): For this document, the term "waste stream" refers <u>only</u> to byproducts of the pulping process.

CHAPTER 3 MAJOR CONSIDERATIONS

3.1 Introduction

This *Recommended Good Practice* describes some of the special considerations required for system design and operation of waste streams incineration in a kraft recovery boiler. This information is intended to provide guidelines for safe firing of NCGs and other kraft recovery process waste streams. It is not the intent of this document to design the systems.

3.2 Explosion

By definition, the DNCG are gases from those sources that are below the lower explosion limit (LEL). CNCG are gases from those sources that are generally above the upper explosion limit (UEL). During abnormal operating conditions, individual DNCG sources can be occasionally prone to have concentrations spike above the LEL, particularly gases generated from chip bins, digester blow tanks, washer foam tanks, and heavy black liquor storage tanks. Gas streams combined from several sources in a DNCG system require the system be designed to operate below the LEL to prevent potential explosive or flammable conditions from occurring. Air infiltration in a DNCG system serves to dilute the gases, lessening the potential for explosion.

CNCG and SOG are rendered non-flammable due to low oxygen content. The composition of SOG is typically a saturated vapor stream and explosion risk is low. The composition of CNCG is not always above the UEL. The risk of explosion occurs when gas composition changes occur, creating a situation where the stream drops below the UEL. Such changes in a CNCG system could be brought about due to an operational upset, system failure or air infiltration from leaking flanges, gaskets or valves on the vacuum section of the collection header.

The explosion limits of NCG constituents are listed in Table 1.

Table 1 Explosion Limits of NCG Constituents[1]

Constituent Gases	Lower Explosion Limit (LEL) % Volume in Air	Upper Explosion Limit (UEL) % Volume in Air
Turpentine (α-Pinene)	0.80	Not Established
Methanol (CH_3OH)	7.3	36
Methyl Mercaptan (CH_3SH)	3.9	21.8
Dimethyl Sulfide (CH_3SCH_3)	2.2	19.7
Dimethyl Disulfide (CH_3SSCH_3)	1.1	16.1

[1] U.S. Bureau of Mines, Bulletin No. 503

Burgess cites values of explosion limits that are equal or very close to the above values.[2] The author further indicates the generally accepted values for combined gases to be 2% for LEL and 50% for UEL, that is, gases are flammable over the range of 2 to 50% for all combustibles.

Due to the explosive nature of these NCG constituents, the DNCG, CNCG and SOG gas streams should be collected and transported in separate dedicated pipelines. Mixing of DNCG and CNCG could lead to a combined stream with concentrations within the explosive range. Combining a SOG stream with other concentrated gases may produce two phase flows from the condensation of SOG constituents. Turpentine is the primary concern in this situation due to its very low explosion limit, and high flame propagation speed (2.0 fps). In comparison, the flame velocity of methanol (1.6 fps) and methyl mercaptan (1.8 fps) are much lower.[2]

The removal of condensate from NCG pipelines is critical to ensure safe operation. The design of a NCG transport system includes steam ejectors or fan, mist eliminators, sloped piping, low point drains, and condensate collection systems. The transport systems also incorporate line pressure sensors, rupture discs, emergency purge vents, temperature sensors, flow meters, flame arresters, and isolation valves. The recovery boiler burner management system must address key interlocks for safe firing of NCG including SSVs fully closed or open, scanner proving “no flame” for the continuous igniter (if required) and adequate furnace temperature proven by proxy of a steam flow minimum. The open or closed position of all SSVs should be confirmed by limit switches that provide a control room indication and initiate an alarm if improperly positioned.

A gas explosion within the recovery furnace or burn back into the NCG collection system is the greatest potential hazard. This could occur if a CNCG or SOG stream is introduced into a furnace that does not have a continuous igniter in service and adequate furnace temperature from the firing of auxiliary fuel and/or black liquor combustion, or if a DNCG stream being used as combustion air becomes concentrated above its LEL. Gas explosions could also take place in the gas handling system close to the recovery boiler. Explosions in the gas handling system could trigger a sequence of events leading too much more serious consequences.

The velocity of the waste gas stream entering the furnace should be above the flame propagation speed to reduce the opportunity for burn back. Flame propagation speeds for gas streams containing turpentine are very high and this requirement is virtually impossible to meet if the turpentine is not removed from the gas stream prior to incineration. Contamination of the gas stream with turpentine is the most frequent cause of explosions in DNCG handling systems.

Condensate formed in NCG collection and transport systems provides the potential route for water to enter the furnace cavity. Waste gas streams are frequently collected at saturated conditions, and steam ejectors are recommended for use as prime movers in the gas collection and transport systems. The steam brought into the system with an ejector is

[2] Burgess, T.L., *Noncondesible Gases*, Chemical Recovery in the Alkaline Pulping Process, Chapter 3

used to purge the piping and warm the line prior to introducing NCG's, and also to act as a "flame arrestor" of sorts while reducing the percent oxygen concentration in the stream during normal operation. It is possible to have large aqueous streams, such as digester extraction liquor or foam formed in the evaporator and carried through a condensate stripper, back up into the waste gas collection system.

Possible modes for water entry into the furnace when burning waste streams include:

1. Flooding the gas stream with liquid due to inadequate sloping of the ductwork and inadequate or malfunctioning drains in the gas transport system.
2. Condensation from high-moisture gas in cold ductwork or inside the boiler during start-up, boiler trips or blackouts.
3. An explosion in the gas handling system close to the boiler could damage boiler pressure parts and result in a water leak into the furnace.

The Waste Streams Subcommittee emphasizes the importance during the design of the NCG systems to carefully analyze all automatic actions that can occur during upsets or other upset conditions at the NCG source or at the boiler and/or transport system. This analysis should include start-up, shutdown and upset conditions of the system, and consider all sources, such as, evaporator, condensate stripper and digester, and the boiler.

Liquid waste streams blended with black liquor and liquid waste streams fired in dedicated burners do not, in themselves, represent an explosion hazard during transport to the recovery furnace. There are design considerations important to both and these are described in later chapters.

3.3 Turpentine Hazards

The most prevalent cause of fires and explosions in NCG collection, transport and combustion systems is the presence of terpenes (turpentine vapor) in the gas stream in concentrations that result in explosive mixtures. These can be easily ignited from several sources such as static electricity, an electrical spark, or reaching the auto-ignition temperature of the α-pinene (487°F). The upper and lower explosion limits for turpentine vapor are not very well defined, but the explosion range is known to be very wide due to the variability in turpentine composition.

3.4 Emergency Shutdown Procedure (ESP)

The protocol for the recovery boiler operation is that an ESP shall result in the **immediate** diversion of all fuels from the furnace. This includes any waste streams which can be fired in the recovery boiler. DNCG, CNCG and SOG, or other waste streams entering the recovery furnace, must be automatically diverted upon initiation of an Emergency Shutdown Procedure (ESP).

3.5 Corrosion

In some instances, the introduction of DNCGs into existing air systems has led to corrosion of the air ducts. Proper design of the collection and transport system will minimize the potential for corrosion. Use of a gas cooler with DNCG will remove water vapor. If a cooler is used, a heater should be installed (after the mist eliminator) to reheat the DNCG. Heating should be a part of the system regardless of whether the DNCG is injected into the furnace through ports or mixed with combustion air in the ducts. The transport system should be designed to deliver the gas at approximately 50% or less relative humidity and at least 150°F. The temperature should be higher than the dew point of the gas stream.

Proper material selection is critical for avoiding corrosion. An additional safety measure is installation of corrosion coupons to monitor corrosion and predict the remaining life of a given system. At a minimum, all components of the transport and combustion system should be inspected regularly.

Thermal oxidation of liquid or gaseous waste streams could lead to higher SO_2 levels in the furnace and a greater potential for pressure part corrosion. Lower drum ("near drum") corrosion caused by acidic sulfates has been reported by a number of mills. Corrosion could lead to a boiler pressure part failure. In addition, any burners and/or flame arresters in the NCG system are very susceptible to corrosion and need to be inspected regularly. SO_2 in the flue gases leaving the recovery furnace must be maintained at a low level to minimize the potential for corrosion. An important consideration for thermal oxidation of liquid or gaseous waste streams in the recovery furnace is adequate black liquor concentration (typically over 70%) to provide furnace conditions that make it possible to control the SO_2 at the desirable low levels for corrosion and emissions control.

3.6 The Effect of Sulfur Input and Solids Concentration on SO_2

The Cluster Rule (in North America) requires incineration of liquid or gaseous waste streams in a boiler by introducing the gases to the 'flame zone' to ensure destruction of these gases via oxidation to sulfur dioxide (SO_2). Flame zone is not defined.

In a recovery boiler, the SO_2 produced in the thermal oxidation of black liquor is scrubbed by the alkali fume present in the upper furnace to form sodium sulfate (Na_2SO_4) which deposits on tube surfaces and is captured in the electrostatic precipitator. In this sense, recovery boiler chemistry provides a self-scrubbing mechanism for SO_2. The limiting factor for SO_2 scrubbing is the amount of alkali hydroxides, sodium and potassium, that are present in the furnace. In general, furnaces that burn hotter (those with higher black liquor solids) will volatilize more sodium and in turn have a higher sulfur capture efficiency. There are many cases reported in the literature of recovery boilers operating with low or no detectable SO_2.

The high sulfur capture efficiency is one of the factors that make incineration of liquid and gaseous waste streams in the recovery furnace an attractive alternative. The impact

on emissions is less than other incineration devices (such as bark boilers or stand-alone incinerators) and the sulfur is maintained within the liquor cycle. For example, if the mill is incinerating 500 lb/hr of sulfur from the waste stream compounds in a recovery boiler with a capture efficiency of 98%, 490 lb/hr of the sulfur would be recovered in the form of saltcake (equivalent to 10.3 tpd NaHS or 26.1 tpd Na_2SO_4).

Analysis of the ash from a recovery boiler can give an indication of its capacity to scrub additional sulfur. If the ash collected in the electrostatic precipitator contains sodium carbonate (Na_2CO_3), there is sodium available for scrubbing more sulfur in proportion to the Na_2CO_3 content. Investigations by the University of Toronto demonstrate that the black liquor solids concentration should be above 70% to assure sufficient Na_2CO_3 in the flue gas.[3] The data show that ash generally contains 8-10 mole percent carbonate [$CO_3/(Na_2 + K_2)$] when the black liquor is fired at 70% solids. This level of carbonate would, in most installations, be sufficient for sulfation of alkali hydroxides to provide complete SO_2 removal.

Most modern recovery boiler installations and an increasing number of the older units are firing black liquor at concentrations exceeding 70%. One of the most noticeable results of burning the liquor at the higher solids concentrations is that the SO_2 content of the flue gas is frequently negligible. This is particularly true in North America where sulfidity levels are commonly in the 25 to 30% range. For sulfidity levels on the order of 40%, such as those common in Nordic countries, even higher solids levels may be required to ensure a negligible concentration of SO_2 in the flue gas. Higher solids mean that less water is introduced into the furnace to absorb heat by evaporation, resulting in higher temperatures in the lower furnace. This results in an increased level of alkali (sodium and potassium) in the flue gas to react with the SO_2 that is also formed as a combustion product.

3.7 The Effect of SOG Input on NOx Emissions

The SOG stream from the stripper typically contains ammonia. The ammonia may be in sufficient concentration to cause the formation of NOx in the recovery furnace. One study indicates that approximately 20% of the nitrogen in the black liquor is removed during evaporation.[4] Most of this nitrogen ends up in the evaporator condensate. Subsequent stripping will remove the nitrogen from the condensate, and it will ultimately be found in the SOG. The stripper supplier and the boiler manufacturer should be consulted to ascertain the effect on the boiler NOx emission, if any.

---

[3] Tran, H., Villarroal, R., *Effect of CNCG Combustion on Recovery Boiler Performance and Precipitator Dust Composition*, unpublished paper, Annual Research Review Meeting, University of Toronto Pulp & Paper Centre, November 18-19, 1998.

[4] Kymalainen, M, Forssen, M, Hupa, M, *The Fate of Nitrogen in the Chemical Recovery Boiler Process in a Kraft Pulp Mill*, Proceedings of the International Chemical Recovery Conference, TAPPI Press 1998, p. 19-32.

3.8 Health Considerations

Liquid and gaseous waste steams contain hydrogen sulfide, as well as other reduced sulfur gases, and can be hazardous to human health.

The toxic nature of the NCG and the potential explosion hazard must be carefully considered in plant design and training. The rupture or other failure of the gas handling system could allow these gases to enter the recovery boiler building in hazardous concentrations. Effort should be made to minimize the routed distance of CNCG piping inside the boiler house. Personnel Safety Procedures and Training of personnel must be implemented for the additional equipment and systems. Continuous monitors for TRS must be installed to warn personnel in the event of a leak. For extra precaution, operations personnel can be equipped with respirators.

The DNCG stream will generally contain gas compounds at a much lower concentration representing a reduced health hazard. There have been reports of operating personnel suffering nausea as a result of the gases escaping into the recovery building. The digester vent gas could be at a concentration higher than other DNCG streams and thereby constitute an increased hazard. This *Recommended Good Practice* recognizes alternatives for handling the DNCG in the recovery boiler building in Chapter 4.

The American Petroleum Industry has published API Recommended Practice 55 that in Appendices summarizes the *Physical Properties and Physiological Effects of Hydrogen Sulfide*[5] and *Physical Properties and Physiological Effects of Sulfur Dioxide*[6]. The first Appendix includes Tables A-1 of typical characteristics of Hydrogen Sulfide and A-2, Summary of Occupational Exposure Values for Hydrogen Sulfide.

Other liquid waste streams will not generally represent a direct personnel hazard as these are contained in piping systems to the recovery furnace. Health hazards would occur if there were a rupture or other failure of the piping system.

3.9 System Complexity

Adding additional gas or liquid streams to a recovery boiler increases the system complexity. With the availability of distributed control systems, proper training, and proper design of the systems, recovery boilers can be operated with the added complexity without posing a threat to safe operations. DNCG can be viewed as odorous air and adds minimal complexity, but CNCG, SOG, and other liquid streams should be treated similar to an auxiliary fuel with specifics on safety interlock requirements as provided in the following chapters.

---

[5] Appendix A, with Tables A-1, Hydrogen Sulfide, and Table A-2, Summary of Occupational Exposure Values for Hydrogen Sulfide, API Recommended Practice 55, Recommended Practices for Oil and Gas Producing and Gas Processing Plant Operations Involving Hydrogen Sulfide.
[6] Appendix B, Practice 55, Physical Properties and Physiological Effects of Sulfur Dioxide.

Operational upsets are a major consideration in the design and operation of the system to introduce the CNCG into the recovery furnace. Instabilities in the gas incineration system could upset the boiler operation or distract the operator's attention. This increases the vulnerability of the recovery boiler to other hazards. Similarly, upsets in the recovery boiler may lead to unsafe conditions for the thermal oxidation of the CNCG. Either situation requires the immediate diversion of the CNCG to the recovery building vent or alternate point of incineration. Failure to satisfy any of the normal recovery boiler safety interlocks would be a further cause for immediate diversion of the CNCG from the recovery boiler, as would the load on the boiler falling below the level prescribed within this *Recommended Good Practice.* The conditions for tripping and diverting this stream from the boiler will be addressed more specifically in Chapter 5 titled "Guidelines for Thermal Oxidation of CNCG and SOG".

Chip bin NCG (CBNCG) adds a level of complexity due to the potential for turpentine being present in the transport system to the recovery furnace. The chip bin gases can be a separate gas stream or can be included in the DNCG stream. The conditions for tripping and diverting this stream from the recovery furnace are addressed more specifically in Chapter 8.

Other liquid waste streams are introduced by mixing with black liquor or in dedicated burners. Those liquids mixed with black liquor can add complexity to the black liquor firing system. Those liquids fired in dedicated burners add complexity associated with the presence of an additional burner in the recovery furnace and the recommended interlocks for safe operation.

3.10 Integration/Reliability of Transport Systems

While proper design of the transport systems is an important facet of liquid and gaseous waste stream combustion, it is beyond the scope of this document. Waste streams must be properly conditioned.

Specifications for gas conditioning required for introduction to the recovery boiler are included in Chapters 4, 5 and 8. Interlocks should be designed so that, in the event the specified gas or boiler conditions are not met, or there is an instrument failure, the transport of gases is isolated from the recovery boiler. In other words, the system must be "fail safe".

Specifications for liquid streams in black liquor or fired in dedicated burners for introduction to the recovery boiler are included in Chapters 6 and 7.

3.11 Input

The design of a new recovery boiler provides the engineer the opportunity to take into account the additional heat input that may be entering the furnace with the liquid and gaseous waste streams. The furnace size, additional burner requirements, and placement

of the entry points for waste streams, as well as the location and air volumes for air ports, can be optimized by the designer.

The design evaluation to thermally oxidize NCG in an existing recovery boiler must consider all boiler and auxiliaries limitations. These limitations will vary on a case-by-case basis. In cases where the recovery boiler capacity is limited by the heat input, it may be necessary to decrease proportionately the input of black liquor when firing waste streams. As an order of magnitude example, if a mill is firing CNCG and SOG at 3000 ACFM with an average heating value of 65 BTU/ACF the heat input is 11.7 million BTU/hr. Assuming the recovery boiler at maximum heat input is burning 3.5 million lb/day of black liquor solids with a heating value of 6600 BTU/lb, the heat input from liquor is 962.5 million BTU/hr. Thus, the heat input from CNCG/SOG is equivalent to approximately 1.2% of the heat from liquor (i.e., the mill would need to consider reducing the liquor firing to reduce the liquor heat input by 1.2%).

Many North American recovery boilers being considered for the thermal oxidation of CNCG will require an increased level of solids concentration to assure that SO_2 is not leaving the boiler. The additional benefit to raising the solids concentration is that the flue gas volume is reduced, thereby providing an opportunity to increase heat input without increasing the gas velocity in the furnace or through convection surfaces. The actual heat input for NCG will depend on the composition of the stream. The heats of combustion for different NCG components are listed in Table 2.

Table 2 Heats of Combustion for NCG Components[7]

Component	HHV (BTU/lb)
Methanol (gas)	9,770
Turpentine	17,870
Hydrogen Sulfide	6,570
Methyl Mercaptan	11,220
Dimethyl Sulfide	13,280
Dimethyl Disulfide	10,160

3.12 Condition of the Recovery Boiler

In general, it is always easier to design an auxiliary system for new construction as opposed to retrofitting an existing unit. As mentioned above, heat input can be a concern for an existing unit. Older units in particular have short furnace heights that compromise residence time and heat release per unit of volume. The furnace wall construction is another consideration; units pre-dating membrane wall construction have questionable integrity of the walls to contain the waste streams. For DNCG, the integrity of the duct work can also become a major concern. If the condition of the duct work is not considered suitable for transport of DNCG, then a separate duct system may have to be designed. This has been done on some units.

[7] *Collection and Burning of Kraft Noncondensible Gases – Current Practices, Operating Experience, and Important Aspects of Design and Operation*, Technical Bulletin No. 469, NCASI, Aug. 29, 1985.

CHAPTER 4 GUIDELINES FOR THERMAL OXIDATION OF DNCG

4.1 Introduction

These guidelines cover the use of the recovery boiler as a control device for safe thermal oxidation of DNCG. Chip Bin NCG (CBNCG) can be one of the DNCG streams that this chapter covers, but Chapter 8 must be referenced to understand CBNCG. This chapter also applies to dedicated systems for thermal oxidation of dissolving tank vent gases (DTVG) in the recovery boiler.

4.1.1 Safety

During the thermal oxidation of DNCG, the safety for both personnel and equipment, as well as health hazards for personnel, must be considered.

The DNCG system is considered an "odorous-air" system and DNCG becomes a substitute for a part of the combustion air supply. DNCG is not a fuel. Systems and equipment for thermal oxidation of DNCG, as well as the systems and equipment for collection and treatment, should be designed and controlled such that:

- The escape of DNCG into the recovery building area is prevented insofar as design makes it possible.
- Condensate cannot carry into the recovery boiler.
- Special consideration should be placed on the design of the system for collecting and handling the digester chip bin gases recognizing that conditions can occur where the concentration can become flammable.
- In no case shall the safety requirements be less restrictive than those presented in the following BLRBAC publications:

    1. Recommended Good Practice for the Safe Firing of Auxiliary Fuel in Black Liquor Recovery Boilers
    2. Recommended Good Practice for the Safe Firing of Black Liquor in Black Liquor Recovery Boilers
    3. Instrumentation Checklist and Classification Guide for Instruments and Control Systems Used in Operation of Black Liquor Recovery Boilers
    4. Recommended Rules for Personnel Safety Black Liquor Recovery Boilers

4.1.2 Sources

The main sources of DNCG may include:

- Chip bin vents
- Digester blow and stock surge tank vents
- Digester stand pipe vents
- Brown stock and post-oxygen delignification washer vents

- Cylinder molds/decker hood vents
- Fiberline oxygen delignification reactor and oxygen blow tank vents
- Knotter and screening reject drainer vents
- Miscellaneous filtrate and stock tank vents in fiberline operations
- Weak and strong black liquor storage and mixing tank vents
- Crude tall oil soap skimming tank vents
- Crude tall oil acidulation system vents
- Clean evaporator process condensate tank vents
- Recovery boiler dissolving tank vents
- Black liquor oxidation reactor vents

Regarding the selection of suitable DNCG sources, see the Section in this Chapter on Collection of DNCG.

4.1.3 Recovery Boiler Introduction System

DNCGs can be introduced for thermal oxidation into the recovery boiler furnace in several ways.

- Into the suction of the forced draft fan (primary, secondary, tertiary).
- Into the primary, secondary or tertiary air duct either prior to or after the steam coil air heater.
- Through injection nozzles(s) located in a suitable furnace air zone.

The selected method of introduction of the 'odorous air' into the furnace needs to consider the gas concentration at the point of injection and the volume of DNCG. The designer selecting a system to introduce DNCG into the air duct should recognize the potential for release of odorous gas into the boiler area due to ductwork leaks, port rodding leakage, sight glass breakage or other leakage sites. A system design that uses direct injection into the furnace through multiple dedicated nozzles significantly reduces the possibility of odorous gas release.

DNCG replaces a part of the volume of combustion air. Accordingly, the pressure and temperature of the DNCG at the point of introduction should optimally match the conditions of the air being replaced. The volume of DNCG relative to the air volume is a factor to consider. Consideration needs be given for each installation to the percent of the air being replaced in an air zone. For example, DNCG introduction at the tertiary level, that is, above the liquor gun level, may not be appropriate because the volume of DNCG may equal or exceed the full load tertiary air requirement. This could result in conditions of operation where the furnace might become air deficient. The operating function and load characteristic of the "above gun" air required becomes the most important consideration for design of a DNCG system. From a functional standpoint, it may be desirable to use a portion of ambient air for the required combustion air to provide flow modulation for oxygen control and turndown at reduced boiler operating loads.

The exact method of introduction of gas into the recovery boiler is determined during system design in consultation with the boiler manufacturer, process safety resources and insurance carriers.

4.2 Collection and Transfer of DNCG

The placement outside the recovery boiler area of the collection and the transfer motive equipment (fan or blower) shown in Figure 1 for the DNCG system should consider the need for access to equipment when the recovery boiler area is evacuated for an ESP. Access is layout dependent. For example, if the DNCG block and vent is upstream of the transfer fan or blower, there is probably no need to access equipment. The "recovery boiler area" corresponds to the area to be vacated in the event of an ESP.

The introduction and diversion of DNCG should be controlled from the recovery boiler control room.

4.2.1 Collection of DNCG

A thorough sampling and evaluation study of all components entering the dilute gas system should be performed to determine the temperature, volumetric flow, moisture content, and %LEL of each individual source. This study should include both normal steady state operation and maximum rates with upset conditions. This data should be used by a qualified specialist to determine the operating conditions and properties of the combined DNCG stream at the recovery boiler. All liquor-based vents will exhibit lower LEL levels for hardwood liquor than for corresponding softwood liquor vents.

4.2.2 Chip Bin Gas

Chip bin noncombustible gas (CBNCG) is covered in detail in Chapter 8. In that the Chip Bin can be the most significant NCG source that can jeopardize the safety of a combined DNCG system, particular attention should be given to the detailed discussion provided in that chapter. An evaluation of risk factors is necessary to qualify a particular chip bin vent gas as "blendable" with DNCG. If a particular CBNCG qualifies for blending, then the DNCG guidelines in this chapter (Chapter 4) can be used for that CBNCG.

4.2.3 Dissolving Tank Vent Gases

Dissolving tank vent gases (DTVG) are DNCGs containing primarily air and water vapor.

- The dissolving tank only operates when the boiler is online, while generation of other DNCGs is dependent on their process source. The dissolving tank DNCG flow is typically large.
- By keeping the dissolving tank stream separate from the other DNCG streams, a different furnace injection method can be used for each stream.
- DTVGs and DNCGs are covered by different environmental regulations.

A DTVG collection system should include a scrubber/cooler to remove water, particulate and green liquor droplets. The scrubber/cooler should be upstream of the DNCG system fan to avoid deposits on the fan rotor and resulting imbalance. There is no need for a separate mist eliminator in DTVG systems if the scrubber/cooler has an integral mist eliminator.

When designing the gas duct, consider the following:

- Slope ducting to avoid condensate pooling
- Provide a duct
- Establish in sealed liquid drains or a seal pot with an atmospheric overflow.

4.2.4 Black Liquor Oxygen (BLOX) Reactor Vent Gas

Direct-contact recovery boilers employ black liquor oxygen reactors. The vents from these reactors are primarily air and water. However, the odor from this vent can be significant enough to consider treating as a DNCG source. The following are points to consider during design of systems that employ air from oxidation.

- The BLOX DNCG volumetric flow is typically large.
- By keeping the BLOX reactor stream separate from the other DNCG streams, a different furnace injection method can be used for each stream.
- The BLOX reactor can be a potential source of foaming if operated at low black liquor solids.

4.2.5 Crude Tall Oil (CTO) Acidulation Vent Gas

Some mills refine their black liquor soap in a CTO acidulation system. There are various specific methods of acidulation, but the primary components in the reaction are CTO, water, steam, and sulfuric acid. The resultant vapor from the reaction is very high in TRS. There are considerations that should be made when adding this source to an existing DNCG system.

- The CTO acidulation plant can operate independently from the other DNCG sources.
- The discrete amount of TRS in an acidulation system vent can be very high, depending upon the point in the reaction and the source being collected.
- Due to the possibility of intermittent high TRS levels, it is recommended that all the CTO vent sources intended to be routed to the recovery boiler pass through a TRS scrubber. Furthermore, proof of operation of this scrubber should be an interlock prior to combining this source with an existing DNCG system or routing to the recovery boiler.

4.2.6 DNCG Transfer System

The intent of the DNCG transfer system is to reduce the amount of water vapor and condensable gases. The condensate would be typically transferred to a foul condensate collection system.

The DNCG stream should be conditioned to prevent liquid condensate from entering the furnace and/or contributing to corrosion of carbon steel ductwork and other air system components. Mixing DNCG with combustion or dilution air at a lower temperature than the DNCG can cause condensation. A maximum of 50% relative humidity in the DNCG stream is a typical target to avoid condensation after mixing with an air stream but higher relative humidity might be possible in some systems. To achieve a condition of 50% relative humidity, the DNCG would likely be cooled to 110°F or lower. The DNCG should be reheated before injection into the recovery boiler air system or furnace. The expected DNCG temperature after reheating would be 150°F if the gas is cooled to 110°F. Should the cooled gas temperature be above 110°F, a higher reheating temperature would be expected. A mist eliminator (or other method of water/gas separation) should be provided to remove condensate.

The principal motive force for transferring the DNCG to the boiler shall be provided by system fan(s)/blower(s) as shown on Figures 1 and 4. All system fan(s)/blower(s) should be of non-sparking construction. The transport system including the fan casing and shaft should be grounded. The fan casing should have a sealed condensate outlet at its lowest point.

For systems with injection into combustion air ducts, DNCG flow and pressure should be monitored and alarmed. These systems will generally include a transfer fan(s)/blower(s) to transport the DNCG to the boiler area and into the air system that uses a combustion air fan. For systems with dedicated injection nozzles, the transfer fan(s)/blower(s) may be designed to develop the DNCG pressure required at the furnace nozzles. DNCG pressure should be monitored and alarmed.

The piping system beginning at the common collection point (suction of fan(s)/blower(s)) shall typically include the following equipment (see Figures 1 and 4).

- Transfer fan(s)/blower(s)
- Local pressure/vacuum indicators before and after prime mover [fan(s)/blower(s)]
- Pressure transmitters with high and low alarms for monitoring and control located before and after transfer fan(s)/blower(s)
- Gas cooling, condensing, and mist entrainment separating equipment
- Automatic vent valve to atmosphere and automatic shut-off valve to boiler
- Optional tie-ins with automatic switchover to alternate oxidation control device
- DNCG gas temperature conditioning equipment (Reheat can be accomplished by a steam preheater, using the combustion air heating system, or mixing with combustion air.)
- System low point drains with loop seals

- Flow and pressure transmitters with alarm functions
- Temperature transmitters with high/low alarms for gas condensers/preheaters
- A double block and bleed arrangement if required for maintenance

Automatic vent lines for DNCG systems should be routed to a safe location.

For DNCG systems handling dissolving tank vent gases, there must be an additional vent directly from the dissolving tank to a safe location, which will open on dissolving tank high pressure.

4.2.7 DNCG Piping System and Auxiliary Equipment

Good engineering practices should be employed for all design aspects of the DNCG gas system including metallurgy selection, transport velocities, sloping and draining of piping, accessibility and **safety**.

The DNCG equipment and transport piping or ducting inside the boiler area should be minimized as much as possible to reduce exposure to gas leakage. The control mechanisms should be user friendly. **Proactive** maintenance and repairs for all electrical and mechanical equipment should be practiced.

A DNCG system handling DTVGs can have build-up problems from particulate and green liquor droplets. It should have provisions for frequent cleaning of heat exchangers – either installed spares or planned maintenance periods. Provisions should also be made for frequent planned maintenance of flow measurement devices.

Materials of construction for ductwork, piping, and equipment in contact with wet unconditioned DNCG should be AISI type 304L or 316L stainless steel, or other metals with equivalent or better corrosion resistance and strength properties.

Gas piping should be designed to prevent accumulation of condensate and flammable deposits. Generally, piping should be sloped in the direction of gas flow to minimize deposits. A low point with a liquid seal drain should be provided in the gas line prior to injection into the recovery boiler system. From the last drain to the recovery boiler, the piping should be designed to prevent condensate from entering the recovery boiler. Sealed liquid drains should have a method of verifying that the seal is in place. Since fiber and organic deposits can be expected, provisions should be made for inspection and cleaning on periodic preventative maintenance schedules.

When a DNCG line is idle due to the boiler being down or when the DNCG is transferred to another incineration point, it is recommended, but not required, that the line downstream of the last shut off valve be purged of NCGs. This may be done with mill air or with a slip stream from existing intake or combustion air as long as there is no NCG component mixed with the air. The steps in this process may be programmed in the permissive logic during the “ventless transfer” or the shutdown of the boiler. This should be designed for a single purge, immediately after idling.

In addition to purging the idle DNCG lines, it is also recommended that the DNCG nozzles that penetrate the boiler be evaluated for possible cooling during long idle periods when the boiler is still operational. The idle nozzles lose the cooling properties from the DNCG flow and are subject to degradation. The owner may consider using mill air for short periods, or piping in a slip stream from a DNCG-free combustion air source.

Piping should not be routed close to critical areas such as furnace corners (to the extent possible), or near areas likely to be occupied by personnel such as normal access ways. For boilers designed with a "weak corner", the area in the vicinity of the corner should also be avoided. Piping should be constructed according to all applicable codes; recognition needs to be given to pressure, explosion hazards, and static charge build-ups. If a system can be subject to deflagration pressure, then consideration should be given to designing for that possibility.

Automatic shut-off valves in DNCG piping should be equipped with fail-closed actuators. Automatic vent valves to atmosphere should be fail-open. Gases should be securely isolated when shutting down the thermal oxidation system, therefore, valves in the system must be chosen carefully with attention given to shut-off classifications. Automatic valves should have position with feedback to a manned control room switches to confirm valve position status.

4.3 Monitoring and Control

Monitoring and control for the DNCG system should be in accordance with any information that is a part of the BLRBAC "Instrumentation Checklist and Classification Guide for Instruments and Control Systems Used in Operation of Black Liquor Recovery Boilers". The system design should evaluate NFPA Standards for guidelines for system design and comply with insurance carrier recommendations.

Bearing failures in transfer blowers have been sources of ignition and consideration should be given to providing continuous or routine vibration and bearing temperature monitoring.

NFPA 69, Chapter 6, sets the allowable level of combustibles. Systems without automatic interlocks should be designed to operate below LEL levels of 25%. Operation of DNCG up to 60% LEL is permitted if automatic interlocks are provided and operational.

DNCG systems that include Chip Bin NCG may be prone to upset conditions where high percent LEL levels can occur. The risk of developing flammable conditions should be evaluated to determine whether continuous percent LEL monitoring is warranted. Guidelines provided in Chapter 8 may be useful in this regard.

4.4 Safety Systems

The DNCG system is considered an "odorous-air" system and a part of the combustion air supply, not as a fuel, and should be considered as an air stream when applying the appropriate sections of the BLRBAC Recommended Good Practices for Safe Firing of Auxiliary Fuel and Black Liquor in Black Liquor Recovery Boilers.

4.4.1 Permissive Starting Logic - DNCG

To admit DNCG to the recovery furnace, the following conditions should be fulfilled:

- Purge credit established and maintained
- Steam flow is above 30% of MCR
- DNCG temperature after reheat not low
- DNCG temperature after condenser not high
- DNCG flow above minimum
- If vent gas from a steaming chip bin is included in the collection system, the chip bin gas temperature after the gas cooler is not high
- Dissolving tank pressure not high (if applicable)
- DNCG temperature after scrubber/cooler for dissolving tank vent gas below maximum (if applicable)

Permissive starting logic for thermal oxidation of DNCG is shown in Figure 2, which is supported by a Logic Explanation Chart.

4.4.2 Protective Tripping Logic - DNCG

Any of the following conditions will disallow introduction of DNCG to the recovery furnace:

- Master Fuel Trip (purge credit lost)
- DNCG flow low
- Gas temperature after chip bin gas cooler high (if applicable)
- DNCG temperature after gas condenser high
- DNCG temperature after reheater low
- Boiler steam flow less than 30% of MCR
- Automatic vent valve not closed.
- Dissolving tank pressure high (if applicable)
- DNCG temperature after scrubber/cooler for dissolving tank vent gas high (if applicable)

Protective tripping logic for thermal oxidation of DNCG is shown in Figure 3, which is supported by a Logic Explanation Chart.

4.5 Personnel Safety

Operational problems, which have to do with collecting, treatment and destruction of DNCG can lead to accidents and serious injury.

The DNCGs contain, among other things, H_2S, organic sulfides and methanol, and at certain times, even high levels of turpentine. In addition to the health risk, there is also risk of a gas explosion.

OSHA Guidelines should be reviewed regarding the risks and precautions for hazardous compounds present in DNCG.

The installation of a TRS monitoring system to detect unsafe levels of gas in the boiler area should be considered. Monitoring should be in accordance with federal, state, local, and mill safety codes and regulations.

Daily inspection and control are needed to check for leaks in systems for DNCG. Leaks in the system should be corrected immediately.

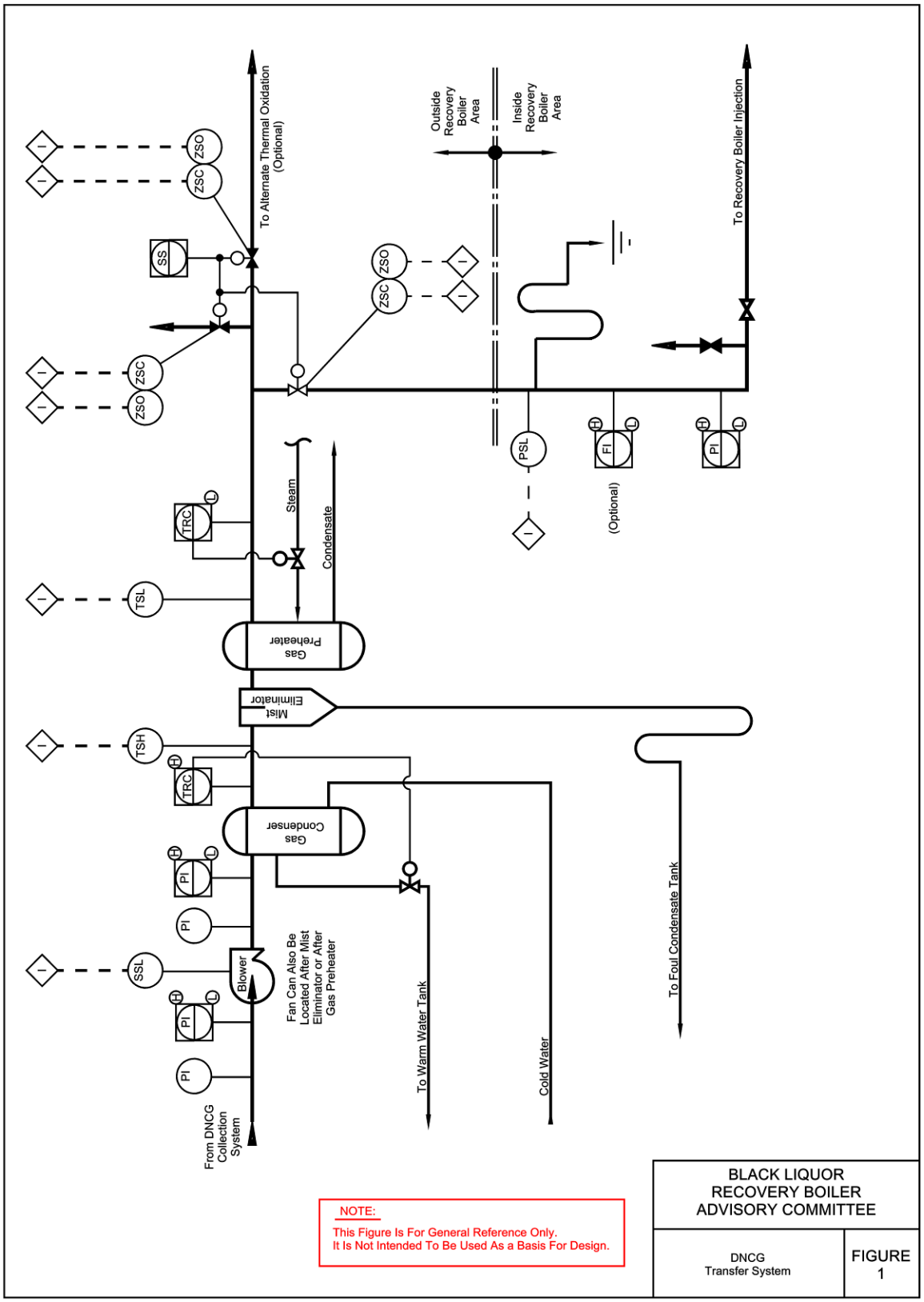

Figure 1 DNCG Transfer System.

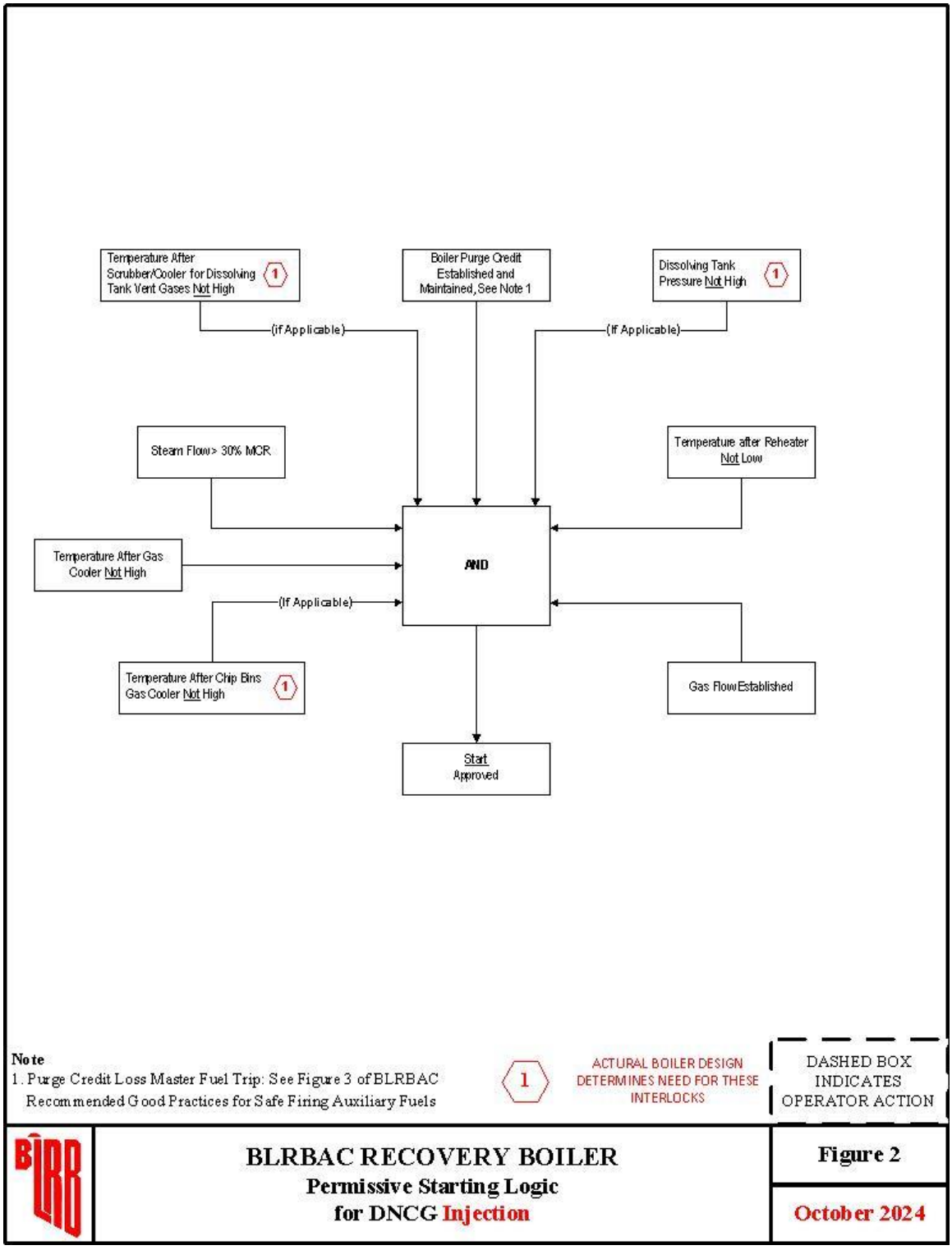

Figure 2 DNCG Permissive Starting Logic

Table 3 Logic Explanation Chart for Figure 2 - DNCG Injection Permissive Starting Logic

LOGIC BLOCK	PURPOSE	HAZARD PROTECTED
Boiler Purge Credit Maintained (From Figure 2 'Common Permissive Starting Logic' in Safe Firing of Auxiliary Fuel Recommended Good Practice)	Ensure firing permissive	Prevent introduction of DNCG while boiler is not being fired.
Steam flow >30% MCR	Ensure furnace combustion is stable.	Unstable operation of boiler may minimize furnace residence time or too low of temperature for oxidation.
Temperature after reheater not low	Ensure proper gas phase of DNCG	Prevent liquid from entering boiler.
DNCG flow established*	Ensure sufficient motive force	Flame propagation up nozzle or pipeline.
Temperature after gas cooler not high	Ensure proper gas properties	Reduce gas volume and moisture.
Temperature after chip bin gas cooler not high	Ensure proper gas properties	Explosion hazard due to entrainment of turpentine.
Start Approval	Start permissive after satisfying interlocks	Interlocks made.
Dissolving tank pressure not high (if applicable)	Ensure stable dissolving tank operation	Prevents pressure pulse from dissolving tank from affecting DNCG system operation.
Temperature after scrubber/cooler for dissolving tank vent gases not high (if applicable)	Ensure proper gas properties	Reduces gas volume and moisture

* Flow can be proven with pressure, flow, fan operating and control damper position (fan operation should be proven with shaft speed), or other means.

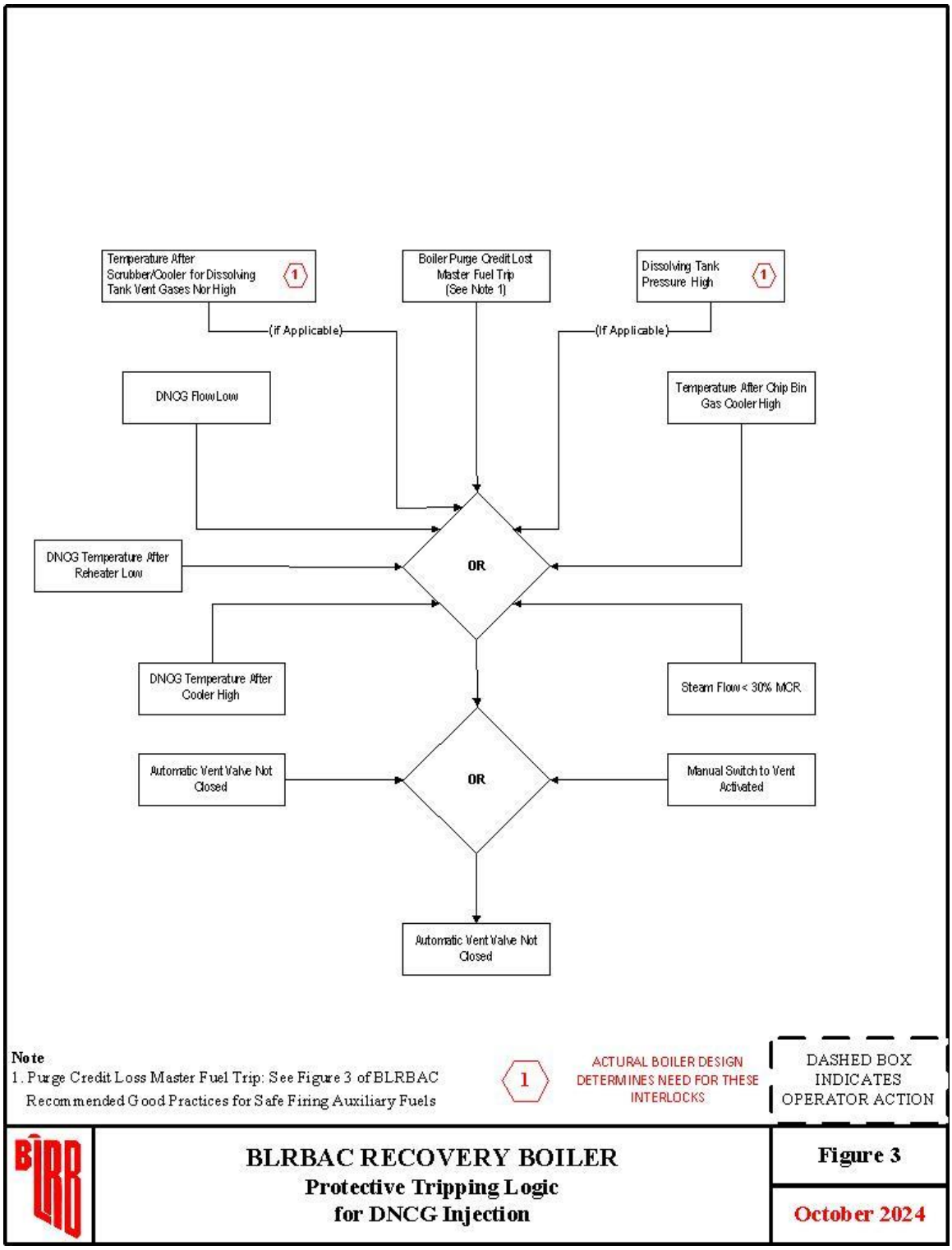

Figure 3 DNCG Injection Protective Tripping Logic.

Table 4 Logic Explanation Chart for Figure 3 - Injection Protective Tripping Logic

LOGIC BLOCK	PURPOSE	HAZARD PROTECTED
Boiler Purge Credit Lost Master Fuel Trip (From Figure 3 'Common Permissive Starting Logic' in Safe Firing of Auxiliary Fuel Recommended Good Practice)	Stop DNCG introduction when boiler firing permissives not met	Prevent introduction of DNCG while boiler is not being fired.
DNCG flow low*	Ensure sufficient motive force	Fame propagation up nozzle or pipeline.
DNCG temperature after reheater low	Ensure proper gas phase of DNCG	Prevent liquid from entering boiler.
DNCG temperature after cooler high	Ensure proper gas properties	Entrainment of liquid, Explosion if temperature above auto-ignition point.
Steam Flow <30% MCR	Ensure furnace combustion is stable.	Unstable operation of boiler may minimize furnace residence time or provide too low a temperature for proper oxidation.
Temperature after chip bin gas cooler high	Ensure proper gas properties	Excursions above LEL.
Automatic vent valve not closed	Ensure stable flow	Unstable flow due to leakage.
Manual switch to vent activated	Firing not desired	System exposed to flame source with no minimum flow signal.
Switch DNCG from boiler to vent	Stop DNCG flow into boiler when parameters are out range.	Hazardous conditions in the DNCG system or boiler.
Dissolving tank pressure high (if applicable)	Ensure stable dissolving tank operation	Prevents pressure pulse from dissolving tank from affecting DNCG operation.
Temperature after scrubber/cooler for dissolving tank vent gases high (if applicable)	Ensure proper gas properties	Entrainment of liquid.

* Flow can be proven with pressure, flow, fan operating and control damper position (fan operation should be proven with shaft speed), or other means.

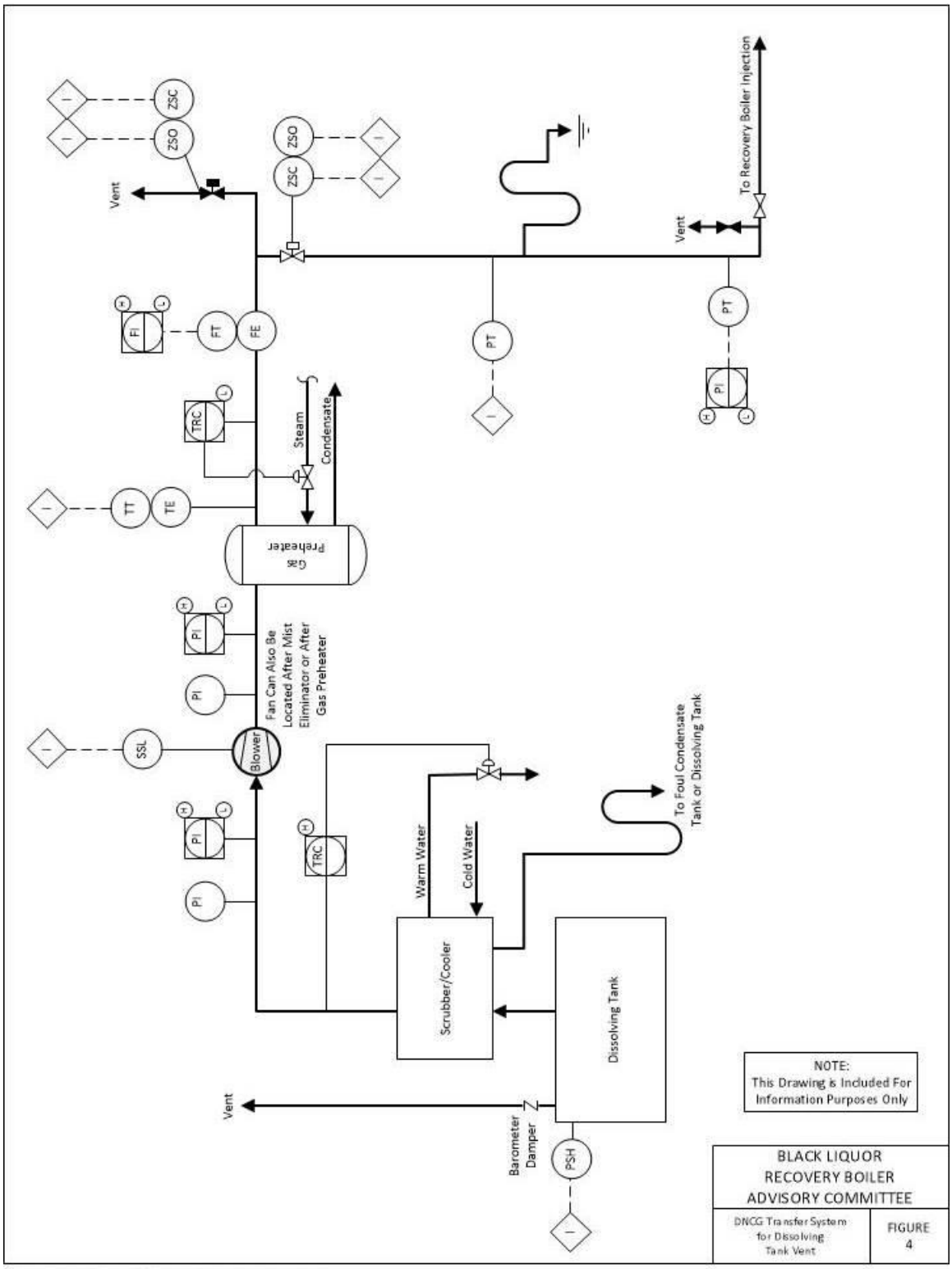

Figure 4 DNCG Transfer System of Dissolving Tank Vent.

Figure 4 DNCG Transfer System of Dissolving Tank Vent.

CHAPTER 5 GUIDELINES FOR THERMAL OXIDATION OF CNCG AND SOG

5.1 Introduction

This *Recommended Good Practice* presents the use of the recovery boiler as the control device for thermal oxidation of CNCG and SOG.

5.1.1 Safety

During the thermal oxidation of CNCG and SOG, the safety hazards for both personnel and equipment have to be considered.

The equipment for thermal oxidation as well as collection and treatment of CNCG should be designed and controlled such that:

- CNCG cannot escape into the recovery boiler building area.
- Condensate cannot carry into the recovery boiler.
- Fire and explosion in equipment and pipe systems is prevented.
- Positive ignition of gases entering the furnace is provided.

In no case shall the safety requirements be less restrictive than those presented in the following BLRBAC publications:

- Recommended Good Practice for the Safe Firing of Auxiliary Fuel in Black Liquor Recovery Boilers.
- Recommended Good Practice for the Safe Firing of Black Liquor in Black Liquor Recovery Boilers.
- BLRBAC Recommended Rules for Personnel Safety for Black Liquor Recovery Boilers.
- Instrumentation Checklist and Classification Guide for Instruments and Control Systems Used in Operation of Black Liquor Recovery Boilers.

5.1.2 Sources

5.1.2.1 CNCG

The main sources of concentrated noncondensible gases (CNCG) are:

- Noncondensible gases from black liquor evaporation
- Vents from foul condensate tank, turpentine decanter, turpentine tank, methanol tank and various pumping tanks.
- Vents from flash tanks, condensers and specialty process equipment--these need to be evaluated on an individual basis concerning classification as a dilute or concentrated NCG. The digester chip bin vent gases cannot be included in the CNCG system because of high air content.

5.1.2.2 SOG

SOG from a foul condensate steam stripper is handled in a separate and independent system for introduction into the recovery furnace for thermal oxidation. These gases generally are the gas product from the stripper reflux condenser and reflux tank, and consist principally of water vapor, methanol, reduced sulfur components and potentially small amounts of turpentine and other hydrocarbons. An additional process step is incorporated in some mills to condense the methanol from the gases and handle the methanol liquid stream separately.

When liquefying the SOG stream, there will be a residual CNCG component that will need to be collected as part of the CNCG system.

5.1.3 Dedicated Burner

A dedicated burner should be used for thermal oxidation of CNCG and SOG in the recovery boiler. The burner should be equipped with an NFPA Class 1 continuous igniter and igniter flame scanner. This arrangement will provide more stable and safer firing of the gases than arrangements that depend on the heat from black liquor combustion to sustain the thermal oxidation of the NCG. This arrangement further considers that there is not a reliable means of detecting a loss of black liquor flame to shut off the NCG flows to the recovery boiler.

5.1.4 The Recovery Boiler as Primary Control Device

When the recovery boiler is used, it should be the primary control device. In the recovery boiler the sulfur compounds in the NCG are captured back into the process. When the recovery boiler is the primary control device, the effect of the NCG on the recovery boiler sodium-sulfur balance will be constant. This balance will change if the recovery boiler is used as a secondary control device with the NCG being thermally oxidized in the boiler intermittently, or if a single recovery boiler is used at a facility with multiple recovery boilers.

5.2 Collection and Transfer of CNCG and SOG

A thorough sampling and evaluation study of all components of the CNCG and SOG should be performed to determine temperature, volumetric flow, moisture content and percentage UEL of each individual source. That study should include both normal steady state operation and maximum rate with upset conditions. This data should be used by a qualified specialist to determine the operating condition and properties of the combined CNCG streams and the SOG stream at the recovery boiler.

Consider locating motive equipment for collecting gases and the diversion system in an area outside the recovery boiler area so they can be accessed even at times when the recovery boiler area is evacuated. Where facilities are subject to winter climates with

temperatures below freezing, consideration should be given to locating the equipment in a warm enclosure. Control of the system should be from the recovery boiler control room.

The engineer should give highest piority to the selection of the ejector and other control components to maximize the best control and safety of the CNCG system.

5.2.1 CNCG

The sources of gases connected to the CNCG system must be of such nature that air cannot enter the system.

The CNCG from the common collection point to the waste streams burner can be handled in two different ways.

- Vapor phase transfer system (no gas conditioning involving any change in component concentration)
- Conditioned gas transfer system

5.2.1.1 Vapor Phase Transfer System

After the common collection point the gases are moved by means of a steam ejector or water ring blower directly to the waste streams burner system. No conditioning involving any change in component concentration is done.

The piping system starting at the steam ejector (water ring blower) typically includes the following equipment.

Figure 5 - Equipment Outside the Recovery Boiler Area

- Steam ejector or water ring blower
- Pressure transmitter for monitoring with high and low alarms located after the steam ejector (water ring blower)
- Mist eliminator(s) (with pressure drop monitoring and high pressure drop alarm)*
- Flow transmitter with interlock function
- Main header vent line with automatic valve, drain function included
- Recovery boiler line automatic shut-off valve*
- Tie-in to alternate thermal oxidation device (optional)
- Steam purge connection

Figure 6 - Equipment Inside the Recovery Boiler Area

- Recovery boiler vent line with automatic valve, drain function included
- Automatic double block and bleed valves (located close to burner)
- Mist eliminator(s) (with pressure drop monitoring and high pressure drop alarm)*
- Recovery boiler line automatic shut-off valve*

- Pressure and temperature switches or transmitters for interlock functions located before the automatic double block and bleed valves
- Flame arresters or detonation arresters (with pressure drop monitoring and high pressure drop alarm) located as close to the burner as possible.

Items with an (*) may be placed inside or outside the recovery boiler area, depending upon the final piping design.

The following equipment will be located in the system as required.

- Pressure relief devices such as rupture disk(s)
- Low point drains
- Steam heat tracing and /or indirect steam preheater (not shown in figures)

The intent of the design for the system is to ensure that no condensates of the condensible components--methanol, water or turpentine--can collect and cause upsets to the waste streams burner system or the recovery boiler. The CNCG piping should be heavily insulated from the source to the waste streams burner to minimize condensation formation in the line. Depending on local conditions, heat tracing may be considered.

5.2.1.2 Conditioned Gas Transfer System

The following components are included in addition to those used in a vapor phase transfer system.

- Gas cooler / condenser
- Indirect steam preheater with auxiliaries

The intent of the Conditioned Gas Transfer System is to reduce the amount of water vapor and condensible gases and increase thermal efficiency by reducing the loss due to water vapor. The condensate would be typically transferred to a foul condensate treatment system which may include a steam stripper.

The gas analysis needs to be carefully evaluated before and after the condenser with regard to explosion range and combustion characteristics to determine the impact of conditioning on the gas. Condensing of large amounts of water vapor, methanol and turpentine may shift the resulting gas mixture into the explosive range depending on the residual amount of infiltration air and the combustible gas concentrations. The heating value and combustion characteristics may also be changed due to condensing of turpentine and methanol.

When the CNCG cooler is located downstream of the steam ejector, it is recommended to heat the gas after the cooler and/or heat trace the down stream piping to raise the operating temperature of the gas burner system to well above the dewpoint and thereby protect it from upsets due to condensates.

5.2.2 SOG

SOG is primarily a mixture of TRS compounds, methanol and steam at saturated steam conditions that can be hotter than other CNCG. Frequently, the pressure of the gas at the stripper condenser discharge is much higher than that of other CNCG streams. The SOG must be handled in lines separate from the other CNCG to prevent condensation of the SOG constituents in the collection system and to handle the differences in pressure. The SOG handling system does not provide conditioning involving any change in component concentration with the exception of a stripper system where methanol may be condensed and transferred as a liquid.

Upset conditions caused by black liquor carryover or evaporator boilout can result in generating foam in the condensate stripper. This foam can then be transported with the SOG to the recovery furnace. Provisions must be made to prevent foam carryover into the SOG to preclude introducing foam into the furnace.

The SOG piping should be heavily insulated from the source to the waste streams burner to minimize condensation formation in the line. Steam tracing of the stripper off-gas piping should be considered in cold climates.

If the stripper off-gases at the source are at an adequate pressure to provide the motive force to transport them to the waste streams burner, then the piping system leading to the burner typically would include the following equipment. This arrangement would also apply to CNCG from a high solids concentrator.

Figure 5 - Equipment Outside the Recovery Boiler Area

- Pressure transmitter for monitoring with high and low alarms
- Mist eliminator(s) (with pressure drop monitoring)
- Flow transmitter with interlock function
- Main header vent line with automatic valve, drain function included
- Recovery boiler line automatic shut-off valve
- Tie-in to alternate thermal oxidation point (optional)
- Steam purge connection

Figure 6 - Equipment Inside the Recovery Boiler Area

- Recovery boiler vent line with automatic valve, drain function included
- Automatic double block and bleed valves (located close to burner)
- Pressure and temperature switches for interlock functions located before the automatic double block and bleed valves.
- Monitoring pressure and temperature transmitters with high and low alarms located before the automatic double block and bleed valves.
- Flame arresters or detonator arresters (with pressure drop monitoring and high pressure drop alarm) located as close to the burner as possible.

The following equipment will be located in the system as required.

- Pressure relief devices such as rupture disk(s)
- Low point drains
- Heat tracing and/or indirect steam preheater (not shown in figures)

If the SOG at the source is not at an adequate pressure to provide the motive force to transport it to the waste streams burner, then the piping system leading to the burner typically would include the previously mentioned equipment and a steam ejector.

5.2.3 CNCG and SOG Piping System and Auxiliary Equipment

CNCG and SOG should be handled in completely independent collection systems due to temperature and pressure differences between the two streams being handled. There is a risk of condensing methanol from SOG with the cooler CNCG stream.

Due to system pressure differentials, it is recommended that the SOG system and CNCG system not share any common auxiliary equipment such as condensate collection vessels. There is a risk of one system discharging into the other.

The piping system and steam ejector or water ring blower should be sized so that minimum transport velocities for gases are maintained.

Gas piping should be designed to prevent accumulation of condensate and should be designed with the shortest possible pipe run inside the recovery boiler building. The piping should not be routed close to critical areas such as the dissolving tank or the corners of the furnace or near areas likely to be occupied by personnel such as normal accessways.

CNCG and SOG should be securely isolated when shutting down the thermal oxidation system, therefore valves in the system should be chosen carefully with attention given to shutoff classifications. Automatic valves should have position switches to confirm valve position status.

Piping downstream of the mist eliminator should be insulated and heat traced to prevent condensate formation in the line. Consideration should be given to sloping the piping in the direction of gas flow for drainage rather than having horizontal lines. This avoids the accumulation of a quantity of water, which could be suddenly released into the furnace as well as the likelihood of accumulating flammable organic deposits. The designer should proceed on the basis that there will be condensate in the pipe from time to time and that it must be removed.

Each vent line should have one shut-off valve with “fail open” actuator that will open automatically when waste stream firing to the recovery boiler is stopped.

Each gas line to the recovery boiler should have a flame arrester. There should be a differential pressure tranmitter across the flame arrester to alarm high differential pressure. Provision can be made to clean the flame arrester using steam or inert gas.

Any water or steam connections to the system should have double block and bleed valves or removeable spool pieces per BLRBAC Recommended Good Practice for Safe Firing of Black Liquor in Black Liquor Recovery Boilers. Automatic valves should have position switches to confirm valves position status. Steam piping should be properly designed and trapped to prevent condensate collection. **Air should not be used as a purge medium due to the possible risk of creating an explosive gas mixture**.

If a seal pot (for isolation and flashback prevention) is used, it should be constructed and controlled so that water cannot carry into the recovery boiler through the waste stream line. Therefore, there should be two (2) independent protective systems such as switches with alarm and interlock functions. It is imperative that the seal pot not overflow into the CNCG transport line to the recovery boiler.

The condensate collection system should be designed so that it cannot be pressurized causing condensate to back flow to the transport line. As an example, an overflow to a closed sewer system could cause pressurization.

Drains in the system are prone to plugging and should be of a size to reduce that possibility, with consideration given to at least 1-1/2” drain lines.

Materials of construction for ductwork, piping and equipment in contact with CNCG and SOG should be AISI type 304L or 316L stainless steel, or other metals with equivalent or better corrosion resistant and strength properties.

Material containing iron that might turn into FeS in contact with NCG should not be used. Under certain conditions in the presence of air, FeS can oxidize and create heat with explosions or fire as a result.

The system designer must take into account the movement of the waste streams burner due to the expansion of the furnace and make sure that the movement does not induce unacceptable stresses in the piping.

Piping must meet the required service conditions and be acceptable to the authorities which may have jurisdiction.

5.3 Thermal Oxidation

5.3.1 Burner

The waste stream burner(s) should be mechanically suited for installation and operation in a recovery boiler.

The waste stream burner(s) should have a dedicated air system. The combustion air can be supplied from a separate fan or from the recovery boiler secondary air or tertiary air fan. Proof of adequate combustion air flow is required as proven by a flow switch or other suitable means.

CNCG and SOG should be conveyed to the burner through independent lines and injected into the flame zone separately. A separate system to feed fuel to the continuous igniter is required.

The burner should be placed in the high heat zone of the furnace at or below the tertiary air level. It should be placed in such a manner that disturbances in the continuous flame of the igniter are avoided so as to not create difficulty with detection.

Example of equipment for monitoring and controlling a single burner installation for CNCG and SOG is shown in Figure 6. Multiple burner installations should follow multiple burner standards.

When the NCG system is down, the second automatic shut-off valve should be locked in the closed position. The connections in the CNCG and SOG piping downstream of the shut off valve at the gun should be designed and installed to allow ease of maintenance and inspection on a routine basis.

Cooling of a CNCG/SOG nozzle that is not in use can not be accomplished by injection of air into the CNCG/SOG nozzle.

5.3.2 Continuous Igniter

An NFPA Class 1 igniter (NFPA 8501) is a key element in the thermal oxidation of CNCG and SOG. The capacity of the igniter should be large enough to provide safe ignition and be at least 10 percent of the maximum energy release of the gases being thermally oxidized. The igniter shall be continuous. The igniter should have proof of adequate ignition energy using a low pressure switch on the igniter fuel header.

The igniter can have a common air duct with the burner for CNCG and SOG. Air feed to the igniter should provide stable ignition and operating conditions.

Light-off of the igniter must be initiated at the burner front, and then only after an operator visually inspects the burner opening in the furnace wall to ensure that there is no plugging.

If the boiler is operated above 50% of MCR, with stable liquor firing and CNCG has been safely introduced, the igniter may be disengaged (i.e. fuel shut off and the igniter interlock suspended/disengaged). Once the igniter has been disengaged, a drop in boiler loading below 50% of MCR or the loss of stable liquor firing should result in a system trip. SOG incineration should still use a continuous igniter.

The oil or gas system to the igniter as well as flame monitoring should, in all aspects, follow the BLRBAC Recommended Good Practice for Safe Firing of Auxiliary Fuel.

5.3.3 Combustion Air

The recovery boiler secondary or tertiary air fan can be used. If the combustion air is supplied by the secondary air fan, a booster fan may be necessary to provide minimum air pressure to the waste stream burner. The system design should be such that uninterrupted air flow to the recovery boiler for black liquor combustion is first priority.

The following instrumentation for monitoring and control of combustion air should be provided.

- Local pressure indicator
- Suitable means for proving adequate air flow
- Indicating pressure transmitter
- Booster fan running--signal from motor starter, speed switch, etc.

5.4 Safety System

Figure 4

The waste streams burner should have a flame safety system complying with the BLRBAC Recommended Good Practice for the Safe Firing of Auxiliary Fuel. The system design should comply with NFPA standards and insurance carrier recommendations. The waste streams burner flame safety system can be integrated with the auxiliary fuel's burner management system or can be stand-alone.

The permissive starting logic and protective tripping logic contain the logic of Safe Firing of Auxiliary Fuel plus additional requirements. The additional requirements pertain to the quality of the NCG.

Care must be taken to <u>never</u> allow the waste streams burner to maintain purge credit. In other words, the waste streams burner cannot be counted as an auxiliary fuel burner when the burner management system checks if there is an auxiliary burner in service.

5.4.1 Permissive Starting Logic - CNCG

To start thermal oxidation of CNCG in the waste streams burner the following conditions must be fulfilled.

- Purge credit established and maintained
- Firing liquor stably or steam flow greater than 50% of the steam flow at MCR
- Combustion air fan for waste streams burner running
- Combustion air flow normal
- CNCG flow (velocity) above minimum
- CNCG temperature above minimum

- CNCG pressure not high
- CNCG pressure not low
- Seal pot level not high (if used)
- Burner switch in START position
- Igniter has been in stable operation for minimum one minute
- Igniter interlocks satisfied

Staging of injection of multiple streams into a waste stream burner should be part of the Start Permissives.

Permissive Starting Logic for thermal oxidation of CNCG in the waste streams burner is shown in Figure 7.

5.4.2 Protective Tripping Logic - CNCG

Any of the following conditions will cause the waste streams burner to shut down thermal oxidation of CNCG.

- Master Fuel Trip (purge credit lost)
- Not firing liquor stably or steam flow less than 50% of steam flow at MCR
- CNCG pressure high
- CNCG pressure low
- Combustion air fan for waste streams burner off
- CNCG temperature below minimum
- CNCG flow (velocity) below minimum
- Combustion air flow not normal
- Igniter interlocks not satisfied
- Burner switch in STOP position
- Seal pot level high (if used)

Protective Tripping Logic for thermal oxidation of CNCG in the waste streams burner is shown in Figure 8.

5.4.3 Permissive Starting Logic - SOG

To start thermal oxidation of SOG in the waste streams burner the following conditions must be fulfilled.

- Purge credit established and maintained
- Firing liquor stably or steam flow greater than 50% of the steam flow at MCR
- Combustion air fan for waste streams burner running
- Combustion air flow normal
- SOG flow (velocity) above minimum
- SOG temperature above minimum
- SOG pressure not high

- SOG pressure not low
- Seal pot level not high (if used)
- Burner switch in START position
- Igniter has been in stable operation for a minimum of one minute
- Igniter interlocks satisfied

Permissive Starting Logic for thermal oxidation of SOG in the waste streams burner is shown in Figure 9.

5.4.4 Protective Tripping Logic - SOG

Any of the following conditions will cause the waste streams burner to shut down thermal oxidation of SOG.

- Master Fuel Trip (purge credit lost)
- Not firing liquor stably or steam flow less than 50% of steam flow at MCR
- SOG pressure high
- SOG pressure low
- Combustion air fan for waste streams burner off
- SOG temperature below minimum
- SOG flow (velocity) below minimum
- Combustion air flow not normal
- Igniter interlocks not satisfied
- Burner switch in STOP position
- Seal pot level high (if used)

Protective tripping logic for thermal oxidation of SOG in the waste streams burner is shown in Figure 10.

5.5 Personnel Safety

Operational problems, which have to do with collecting, treatment and destruction of CNCG can lead to accidents and serious injury.

CNCG contain among other things, H_2S , organic sulfides and methanol, and at certain times, even high level of turpentine. In addition to the health risk, there is also a risk of a gas explosion.

Regarding the risks with hazardous compounds present in CNCG and SOG, see OSHA Guidelines concerning these compounds.

Areas containing NCG piping and equipment should be monitored in accordance with applicable safety codes.

Daily inspection and control is needed to check for leaks in systems for CNCGs and SOGs. Leaks in the system should be corrected immediately.

5.6 System Description and Operation

This section is included to illustrate the application of Chapter 5 guidelines. It is for information purposes only and is not to be considered as additional guidelines.

The arrangement of piping and equipment as shown on the flow sheets (Figures 5 and 6) are the same for both CNCG and SOG. For the purposes of this discussion, the CNCG system is used.

5.6.1 Description

Steam to the gas transport steam ejector has a double block and bleed valve arrangement consisting of valves S1, S2 and S3. This steam connection and other steam connections on Figures 5 and 6 are shown with double block valves and a bleed (or "free blow") valve because they are potential sources of water injection into the furnace. The double block and bleed valve set provides secure sealing plus, with proper sequencing of valve opening, collected condensate can be blown out the bleed line before steam is routed to the gas line.

Downstream of the steam ejector and outside the recovery boiler area, the CNCG line will have a vent to atmosphere that is controlled by an automated shutoff valve, CG2. Following this vent connection there is an automated valve, CG1, which isolates the branch line to the recovery boiler. If required, there can be a tee ahead of CG1. The tee will allow the gas to be transported to an alternate thermal oxidizer through valve CG3.

It is important that valves CG1, CG2 and CG3 be located outside of the recovery boiler area or in the case of indoor installations in a "designated safe area" so that they are accessible at all times, even in the event of an ESP. Being located outside of the recovery boiler area does not preclude the valves from being in another building.

Immediately downstream of valve CG1 is an automated steam connection consisting of valves S5, S6 and S7. It purges and preheats the next "leg" of CNCG line.

Located immediately before valve CG4 is a line size vent isolated by valve CG7. This vent line serves the CNCG line from valve CG1 to valve CG4. It is used for steam preheating, CNCG venting in anticipation of CNCG firing, and purging after ceasing CNCG firing. The steam for preheating and purging is supplied by the previously mentioned valves S5, S6 and S7.

The vent discharges to the outside of the boiler area. Both this vent and the previously mentioned vent controlled by valve CG2 must be above roofs and away from air intakes. The outlets of these vents must be arranged in such a way that ice plugs are avoided.

A condensate drain from the CNCG line must be included to ensure removal of liquid that is swept along by the gases.

A CNCG line double block and bleed valve arrangement represented by valves CG4, CG5 and CG6 provides the final isolation of CNCG from the furnace. The "bleed", CG5, must be designed so that vapor can be vented from the isolated portion of CNCG line while liquid is drained from the line. Valve CG5 could be two valves, one for venting and the other for draining. The vent from CG5 can be connected to the main vent on the discharge of valve CG7.

The CG4, CG5 and CG6 valve set must be located as close to the burner as possible to minimize the retained CNCG volume from these isolation valves to the burner.

If the volume of CNCG that is retained is small and the piping system has the mechanical integrity to sustain a burn back after the isolation valves shut, then purging of the piping from the isolation valves to the burner is not necessary. Not purging the line avoids the possibility of water introduction to the furnace if steam is used for purging.

There are, however, system designs and maintenance safety issues that make purging of this piping run an attractive consideration; for example, large CNCG systems that have a substantial volumetric capacity in this last piping leg. Section 5.2.3, Piping System and Auxiliary Equipment, discusses line sloping, steam supply requirements, and insulating and heat tracing waste gas lines. An important part of this concept is the use of a burner design that is drainable, that is, a burner that cannot retain liquid. The purge must be done immediately after firing the CNCG system is terminated, while the piping is still hot, and with the igniter in service.

If steam purging is used, special attention must be given to keeping the steam free of condensate, thus avoiding introduction of water into the furnace. A steam line that is only occasionally used has a high probability of containing condensate and therefore injecting that condensate into the CNCG piping when the steam line is opened. The system design and operation must ensure that the purging steam is dry. As an alternative to steam, another inert gas can be used as a purging medium. For any purging medium (steam or an inert gas), the purge should displace the volume of gas contained in the piping between the last isolation valve and the furnace.

A flame arrester is located in the CNCG line as close to the burner as possible. The flame arrester physical location must be convenient for isolation and maintenance.

5.6.2 Operation

The CNCG/SOG thermal oxidation system is put into service from a local panel board by an operator who is in contact with the control room. Discontinuing thermal oxidation under normal circumstances is also done locally.

The CNCG transport system is put into operation with branch line isolation valve CG1 closed and vent valve CG2 open. At this point the double block and bleed CNCG valves, CG4, CG5 and CG6, are shut meaning the shutoff valves are closed and the bleed valve (providing vent and drain service) is open.

Next, the steam purge and preheat valves, S5, S6 and S7, are opened along with the vent/drain valve(s), CG7. This provides preheating of the CNCG line from the branch isolation valve outside of the boiler building to the vicinity of the burner. The branch valve CG1 remains closed. Admission of steam preheats the line and exits through the vent/drain.

Adequate preheating of the line will be determined by an operator observing the temperature indicator on the DCS. Once the line between the CG1and CG4 is heated, the preheat steam is shut off, the branch valve CG1 is opened and vent CG2 is closed allowing gas to be vented out of the second vent, CG7. Upon satisfying all permissives, the final gas block and bleed valves are opened, vent CG7 is closed and CNCG gases will be admitted to the furnace for thermal oxidation.

For a normal shut down, CNCG shutoff valves CG4 and CG6 and branch valve CG1 are closed, and both vent valves, CG7 and CG2, are opened as is bleed valve CG5. In addition, steam purge is immediately initiated. After adequate time for thorough purging, the steam purge is shut off.

Table 5 shows the actions that constitute a burner shutdown, both MFT and ESP. The valve positions for “normal operation” and “fail” status are also shown. If an ESP is activated, a MFT will be exercised as well as isolating all steam and water sources. An ESP will not initiate automatic purging of the CNCG line to the burner.

Table 5 Valve status and Actions at MFT and ESP; Figures 5 and 6

Valve #	Description	MFT	ESP	Operating status	Fail status
S1	EJECTOR STEAM BLOCKVALVE	NA	NA	OPEN	OPEN
S2	EJECTOR STEAM BLEED VALVE	NA	NA	CLOSE	CLOSE
S3	EJECTOR STEAM BLOCK VALVE	NA	NA	OPEN	OPEN
S4	STEAM EJECTOR CNTR VALVE	NA	NA	MOD	LAST P
S5	PURGE STEAM BLOCK VALVE	OPEN	OPEN	CLOSE	CLOSE
S6	PURGE STEAM BLEED VALVE	CLOSE	CLOSE	OPEN	OPEN
S7	PURGE STEAM BLOCK VALVE	OPEN	OPEN	CLOSE	CLOSE
S8	PURGE STEAM BLOCK VALVE	OPEN	OPEN	CLOSE	CLOSE
S9	PURGE STEAM BLEED VALVE	CLOSE	CLOSE	OPEN	OPEN
S10	PURGE STEAM BLOCK VALVE	OPEN	OPEN	CLOSE	CLOSE
CG1	CNCG SHUT OFF VALVE	CLOSE	CLOSE	OPEN	CLOSE
CG2	CNCG MAIN VENT VALVE	OPEN	OPEN	CLOSE	OPEN
CG3	ALTERNATE SYSTEM SHUTOFF	NA	NA	CLOSE	NA/CLOSE
CG4	BURNER SHUT OFF VALVE	CLOSE	CLOSE	OPEN	CLOSE
CG5	BURNER VENT VALVE	OPEN	OPEN	CLOSE	OPEN
CG6	BURNER SHUT OFF VALVE	CLOSE	CLOSE	OPEN	CLOSE
CG7	CNCG VENT VALVE	OPEN	OPEN	CLOSE	OPEN
SG1	SOG SHUT OFF VALVE	CLOSE	CLOSE	OPEN	CLOSE
SG2	SOG MAIN VENT VALVE	OPEN	OPEN	CLOSE	OPEN
SG3	ALTERNATE SYSTEM SHUTOFF	NA	NA	CLOSE	NA/CLOSE
SG4	BURNER SHUTOFF VALVE	CLOSE	CLOSE	OPEN	CLOSE
SG5	BURNER VENT VALVE	OPEN	OPEN	CLOSE	OPEN
SG6	BURNER SHUT OFF VALVE	CLOSE	CLOSE	OPEN	CLOSE
SG7	SOG VENT VALVE	OPEN	OPEN	CLOSE	OPEN
D1	AIR CONTROL DAMPER	LAST P	CLOSE	MOD	LAST P
IGNITER GT	IGNITER GAS TRAIN	CLOSE	CLOSE	OPEN	CLOSE

GREY BLOCK OPERATIONS ARE ACTIVATED VIA A TIMER TO ALLOW FOR PURGING OF THE CNCG AND SOG LINES.

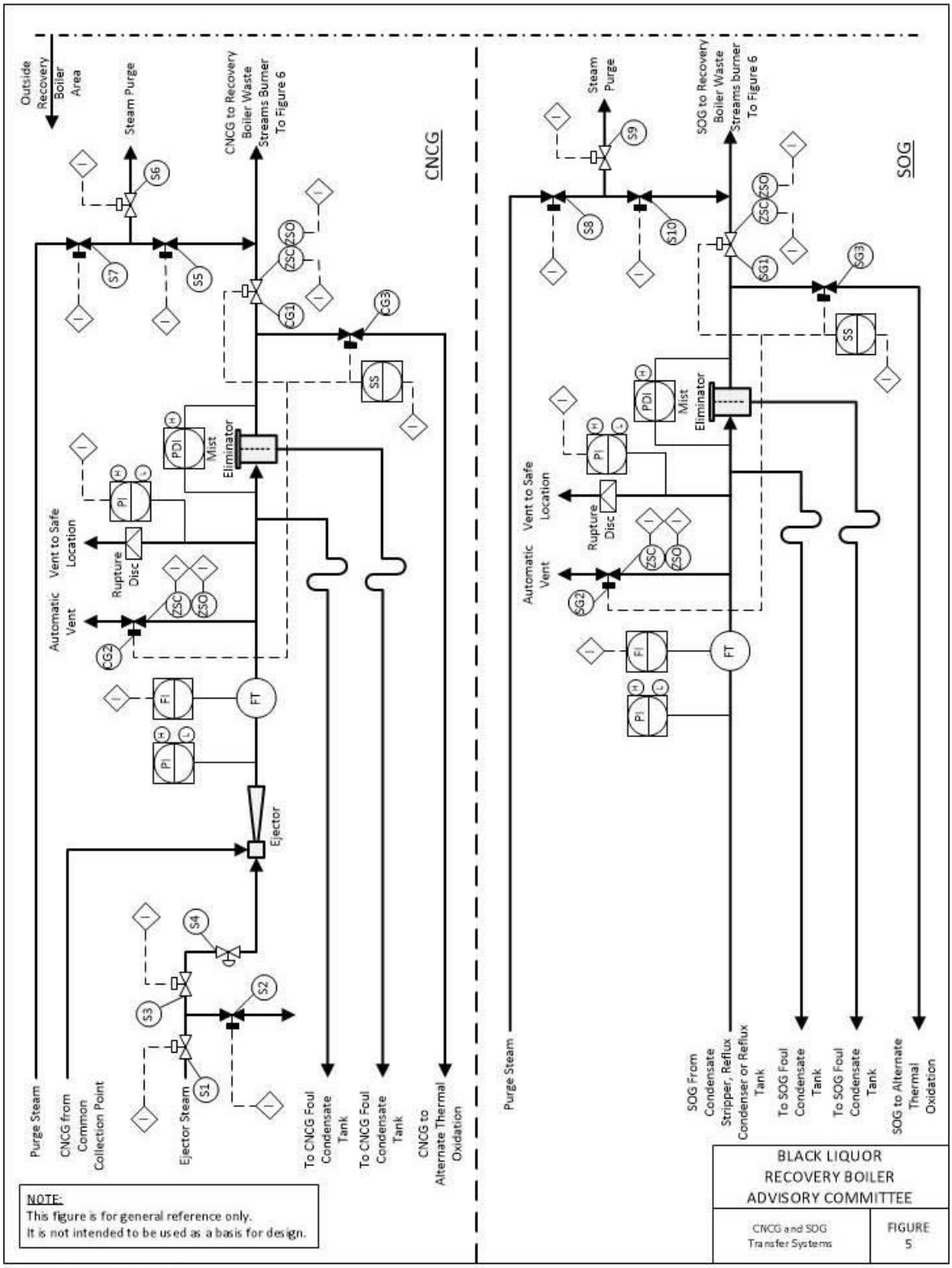

Figure 5 CNCG and SOG Transfer Systems.

Figure 5 CNCG and SOG Transfer Systems.

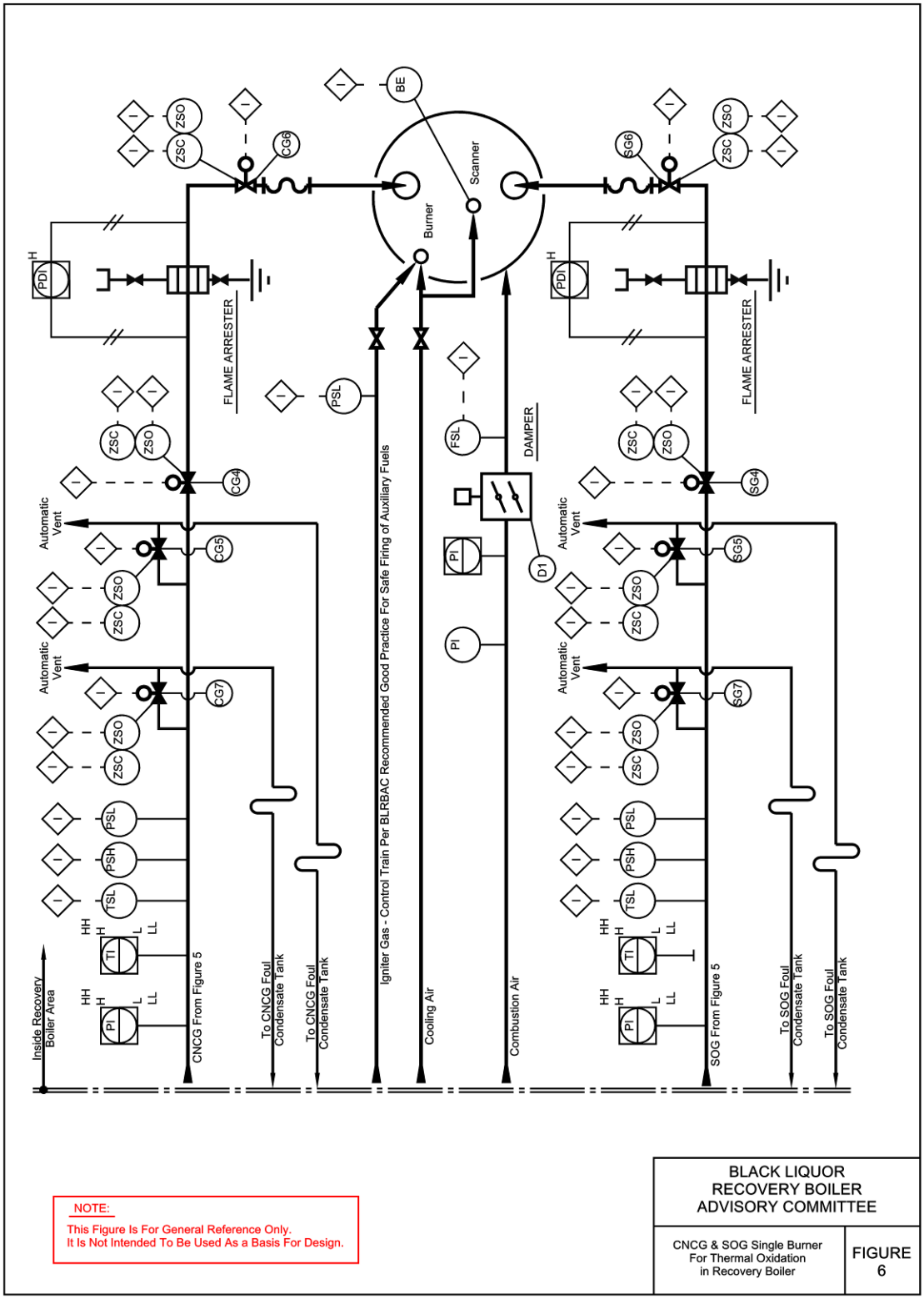

Figure 6 CNCG & SOG Single Burner for Thermal Oxidation in Recovery Boiler.

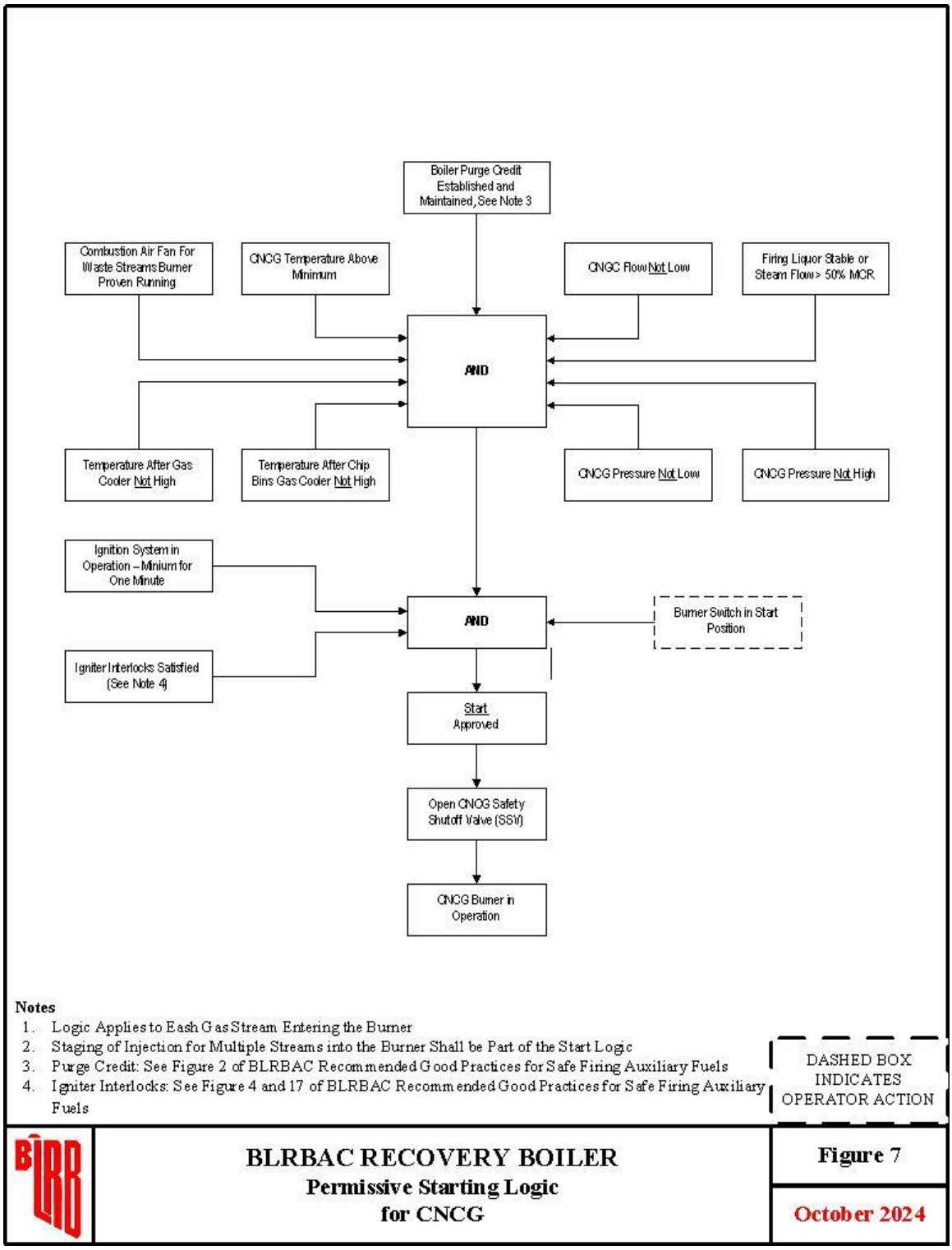

Figure 7 Waste System Burner Permissive Starting Logic for CNCG

Table 6 Logic Explanation Chart for Figure 7 Permissive Starting Logic - Waste Streams Burner

LOGIC BLOCK	PURPOSE	HAZARD PROTECTED
Boiler Purge Credit Maintained (From Figure 2 Common Permissive Starting Logic in Safe Firing of Auxiliary Fuel Guidelines).	Ensure firing permissive.	Prevent introduction of NCGs while boiler is not being fired.
Firing liquor stably or steam flow >50% MCR.	Ensure furnace combustion is stable, and heat input is adequate.	Explosion or improper oxidation of gases.
Combustion air fan for waste stream burner - proven running.	Ensure proper combustion air to burner.	Potential explosion from improper or impaired air flow.
CNCG/SOG temperature above minimum.	Ensure proper gas properties.	Introduction of liquid.
CNCG/SOG pressure not high.	Ensure proper gas properties and injection at proper velocity.	
CNCG/SOG pressure not low.	Ensure proper gas properties and emitted at proper velocity.	
CNCG/SOG flow not low	Ensure proper gas velocity	Avoid plugged nozzle
Seal pot level not high.	Prevent liquid back up.	Possible explosion due to moisture introduction to boiler
Combustion air flow normal.	Ensure air flow through burner.	Potential explosion from improper or impaired air flow.
Combustion air pressure normal.	Ensure proper combustion air properties.	Potential explosion from improper or impaired combustion air supply.
Ignition system in operation - minimum of one minute.	Ensure stable ignition system operation.	Possible explosion due to CNCG/SOG gas burner introduction cycling.
Burner switch in start position.	Allow start after interlocks satisfied.	By operator.
Igniter interlocks satisfied.	Interlocks from Auxiliary Fuel Guidelines 4 and 17.	Explosion from improper or delayed ignition.
Start approval.	All burner/igniter interlocks satisfied.	
Energize CNCG/SOV SSV.	Admit gas to furnace.	
CNCG/SOG burner in operation.	Verify oxidation.	Operator function

Figure 8 Waste Stream Burner Protective Tripping Logic for CNCG.

Table 7 Logic Explanation Chart for Figure 8 Protective Tripping Logic - Waste Stream Burner

LOGIC BLOCK	PURPOSE	HAZARD PROTECTED
Boiler Purge Credit Lost Master Fuel Trip (From Figure 2 Common Permissive Starting Logic in Safe Firing of Aux Fuel Guidelines).	Stop CNCG introduction when boiler firing permissives not met.	Prevent introduction of CNCG while boiler is not being fired.
Not firing stably or steam flow <50% MCR.	Stop CNCG firing when furnace heat input is low.	Explosion or improper oxidation of gases.
Combustion air flow not normal.	Stop CNCG firing in the event of air flow upsets to burner.	Potential explosion from improper or impaired air flow.
Combustion air fan for waste stream burner not running.	Stop CNCG firing when no combustion air to burner.	Potential explosion from improper or impaired air flow.
CNCG/SOG pressure low or high.	Ensure proper gas properties and injection at proper velocity.	Flash back up piping or poor ignition beyond igniter.
CNCG/SOG flow low	Ensure proper velocity	Plugged nozzle
CNCG/SOG temperature low.	Ensure proper gas properties.	Introduction of liquid.
Combustion air pressure not normal.	Ensure proper combustion air properties.	Potential explosion from improper or impaired combustion air supply.
Igniter Interlocks not satisfied.	Interlocks from Auxiliary Fuel Guidelines 4 and 17 not met.	Explosion from improper or delayed ignition.
Seal pot level high.	Prevent liquid back up.	Possible explosion due to moisture introduction to boiler.
Burner switch in stop mode.	Prevent firing of burner.	Operator action.
Close CNCG/SOG SSV.	Shutdown CNCG/SOG burner.	

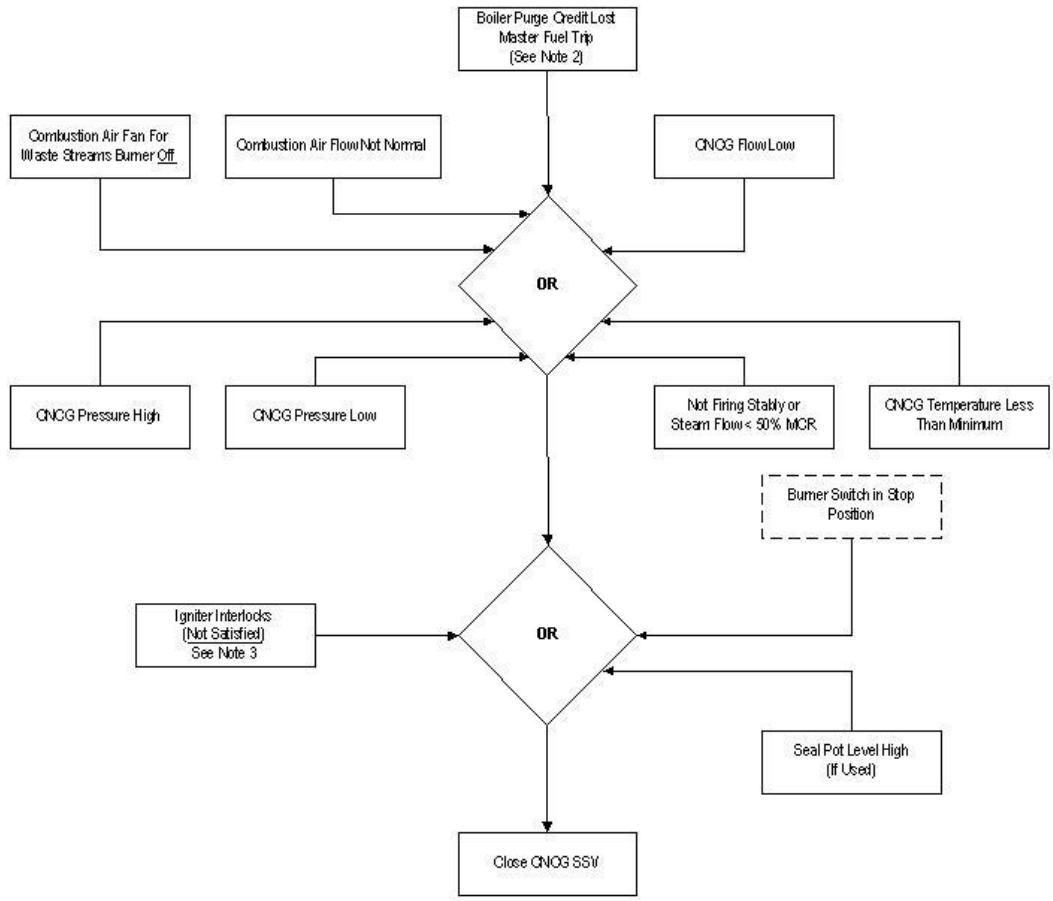

Notes

1. Logic Applies to Each Gas Stream Entering the Burner
2. Purge Credit Loss/Master Fuel Trip: See Figure 2 of BLRBAC Recommended Good Practices for Safe Firing Auxiliary Fuels
3. Igniter Interlocks: See Figure 5 and 18 of BLRBAC Recommended Good Practices for Safe Firing Auxiliary Fuels

DASHED BOX INDICATES OPERATOR ACTION

BLRBAC RECOVERY BOILER
Protective Tripping Logic
CNCG

Figure 8

October 2024

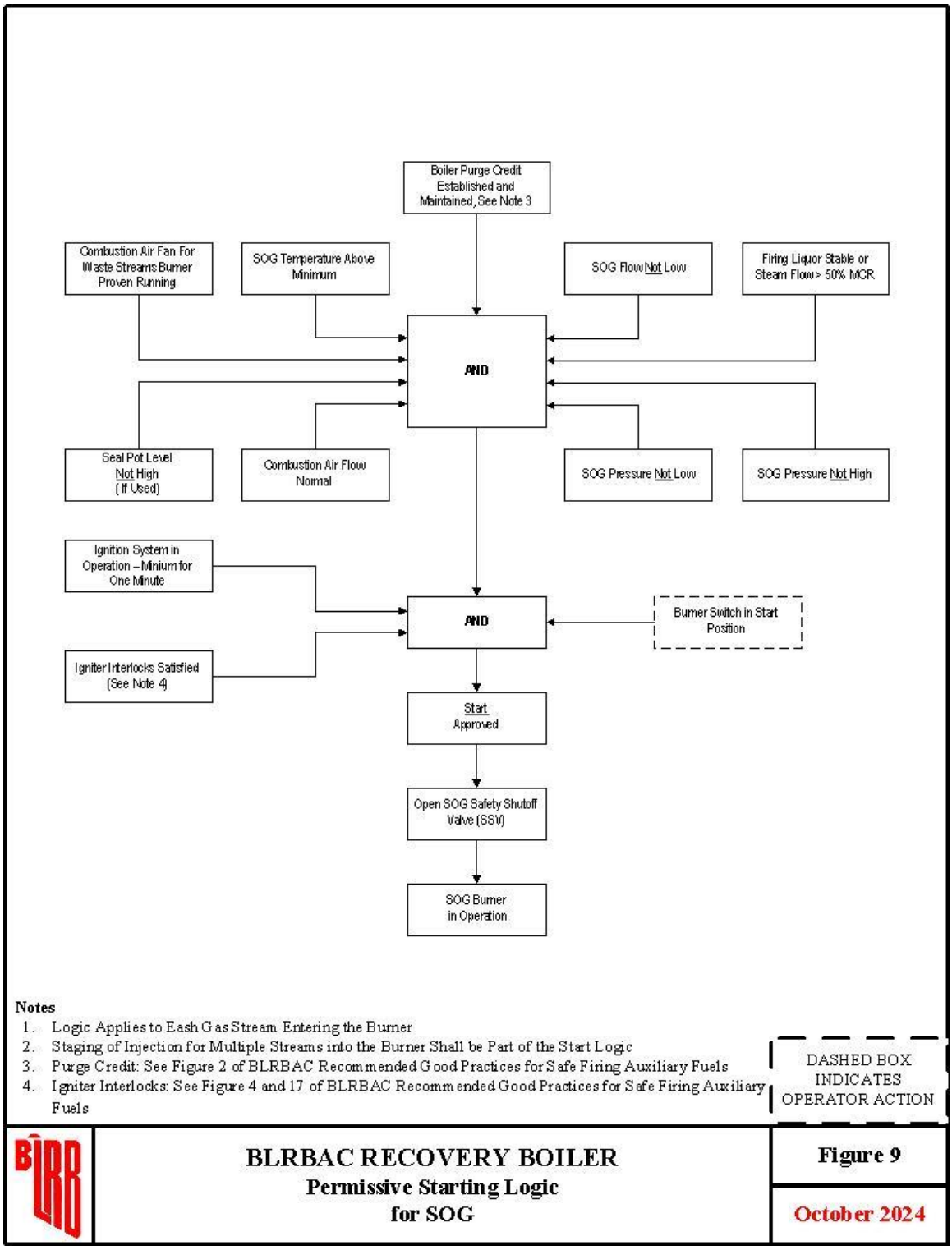

Figure 9 Waste Stream Burner Permissive Starting Logic for SOG.

Table 8 Logic Explanation Chart for Figure 9 Permissive Starting Logic for SOG - Waste Streams Burner

LOGIC BLOCK	PURPOSE	HAZARD PROTECTED
Boiler Purge Credit Maintained (From Figure 2 Common Permissive Starting Logic in Safe Firing of Auxiliary Fuel Guidelines).	Ensure firing permissive.	Prevent introduction of SOG while boiler is not being fired.
Firing liquor stably or steam flow >50% MCR.	Ensure furnace combustion is stable and heat input is adequate.	Explosion or improper oxidation of gases.
Combustion air fan for waste stream burner - proven running.	Ensure proper combustion air to burner.	Potential explosion from improper or impaired air flow.
SOG temperature above minimum.	Ensure proper gas properties.	Introduction of liquid.
SOG pressure not high.	Ensure proper gas properties and injection at proper velocity.	
SOG pressure not low.	Ensure proper gas properties and emitted at proper velocity.	
Seal pot level not high.	Prevent liquid back up.	Possible explosion due to moisture introduction to boiler
SOG flow not low.	Ensure SOG line velocity is adequate	Prevent flame propagation back through SOG line
Combustion air flow normal.	Ensure air flow through burner.	Potential explosion from improper or impaired air flow.
Ignition system in operation - minimum of one minute.	Ensure stable ignition system operation.	Possible explosion due to SOG gas burner introduction cycling.
Burner switch in start position.	Allow operator to start burner <u>after</u> all other interlocks satisfied.	By operator.
Igniter interlocks satisfied.	Interlocks from Auxiliary Fuel Guidelines 4 and 17.	Explosion from improper or delayed ignition.
Start approval.	All burner/igniter interlocks satisfied.	
Energize SOV SSV.	Admit gas to furnace.	
SOG burner in operation.	Verify oxidation.	Operator function.

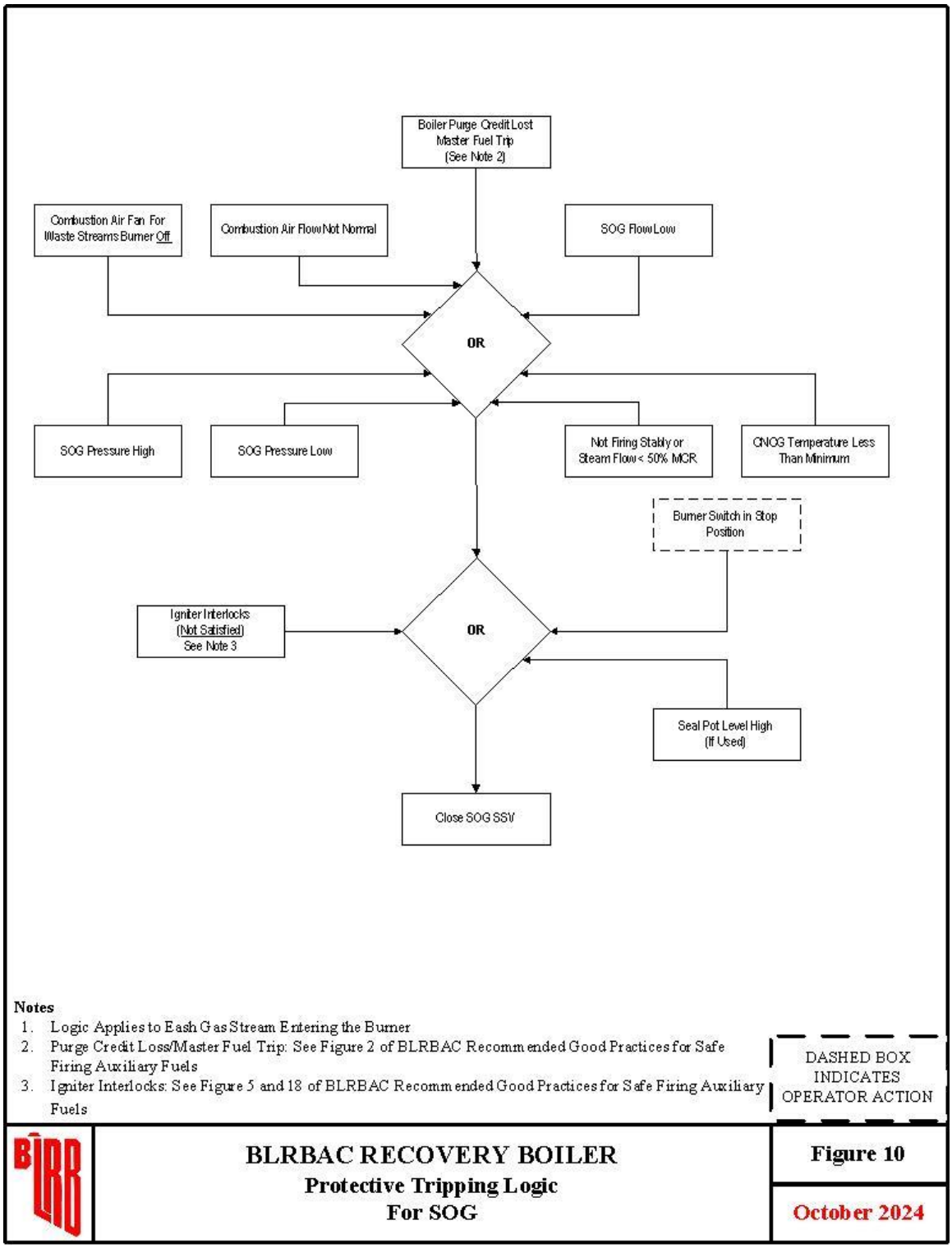

Figure 10 Waste Stream Burner Protective Tripping Logic for SOG.

Table 9 Logic Explanation Chart for Figure 10 Protective Tripping Logic for SOG - Waste Stream Burner

LOGIC BLOCK	PURPOSE	HAZARD PROTECTED
Boiler Purge Credit Lost Master Fuel Trip (From Figure 3 Common Permissive Starting Logic in Safe Firing of Aux Fuel Guidelines).	Stop SOG introduction when boiler firing permissives not met.	Prevent introduction of SOG while boiler is not being fired.
Not firing liquor stably or steam flow <50% MCR.	Stop SOG firing when furnace heat input is low.	Explosion or improper oxidation of gases.
Combustion air flow not normal.	Stop SOG firing in the event of air flow upsets to burner.	Potential explosion from improper or impaired air flow.
Combustion air fan for waste stream burner not running.	Stop SOG firing when no combustion air to burner.	Potential explosion from improper or impaired air flow.
SOG pressure low or high.	Ensure proper gas properties and injection at proper velocity.	Flash back up piping or poor ignition beyond igniter.
SOG temperature low.	Ensure proper gas properties.	Introduction of liquid.
SOG flow low.	Ensure SOG line velocity is adequate.	Prevent flame propagation back through SOG line.
Igniter Interlocks not satisfied.	Interlocks from Auxiliary Fuel Guidelines 5 and 18 not met.	Explosion from improper or delayed ignition.
Seal pot level high.	Prevent liquid back up.	Possible explosion due to moisture introduction to boiler.
Burner switch in stop mode.	Prevent firing of burner.	Operator action.
Close SOG SSV.	Shutdown SOG burner.	

CHAPTER 6 LIQUID WASTE STREAMS BLENDED WITH BLACK LIQUOR

6.1 Introduction

In the arena of thermal oxidation of liquid waste streams, presently the most common method for thermal oxidation is blending the waste stream into black liquor. The most common stream is spent acid from ClO_2 or from tall oil. The second most common stream is soap. These two streams (spent acid and soap) represent the two general categories of streams covered by this guideline: those with a high water content and those that are waterless. In addition, this chapter addresses blending methanol, secondary sludge, tall oil, and turpentine (or red oil) with black liquor.

The system designer should take into consideration features such as limit switches, "fail" position of valves and other safety features as appropriate.

Here are some summary comments covering these guidelines:

- The boiler operation must be stable and firing liquor at a minimum load of 50% MCR when adding waste streams. The minimum load requirement assists in ensuring stable operation.

- The waste stream must always be blended into black liquor before the refractometers to ensure that the refractometers read the stream that is being fired.

- Off-line solids testing of black liquor must be done every two hours when firing liquid waste streams.

- Adding a waste stream continuously provides better recovery furnace operation than a batch operation.

- For streams added to black liquor after final concentration, the waste streams should be metered and proportioned to the black liquor flow rate. Waste stream flows should be limited such that if the stream flows were 100% water, the black liquor solids concentration would not fall below minimum safe firing level.

- High water content streams should be added before black liquor reaches its final concentration. Waterless streams should be added after the final mix tank.

- Include a "management of change" procedure when you are designing or modifying a system to blend a waste stream with black liquor.

- Effect of waste streams on refractometers:
  - Waste streams can coat prisms.
  - Soap lowers the refractive index.
  - Un-neutralized spent acid lowers the refractive index due to precipitation of dissolved solids. The refractometer does not "see" suspended solids.
  - Turpentine or red oil lowers the refractive index.

- AF&PA Recovery Boiler Reference Manual, Volume III section 5.2.1.4, is a good reference and was used in preparing this document.

6.2 Methanol

Definition: Liquid methanol is condensed from stripper off gas (SOG). SOG consists of approximately 50% methanol vapor by weight. SOG can be converted to a liquid of high methanol concentration and heating value through the process of methanol rectification. This liquid typically has a methanol content of 50% to 80% by weight but can range from 30% to 90%. Specific gravity of 100% methanol is 0.79. Methanol from SOG usually contains TRS, terpenes, and other contaminants that make it noxious.

Safeguards for combining methanol with the black liquor stream to the recovery boiler:

Where: Add methanol to black liquor after the point of final concentration in black liquor piping downstream of tankage including the salt cake mix tank. This will reduce the possibility of explosive gases in the vapor space in tanks.

Ensure that there is adequate mixing of methanol and black liquor. The addition should occur far enough upstream in the piping to ensure proper mixing.

If methanol is added upstream of black liquor pumps, be aware that methanol's vapor pressure at black liquor's temperature may result in flashing at the eye of the impeller, which will reduce pump capacity.

Indirect black liquor heaters should be examined for ability to hold a "pocket" of methanol vapor. Injection of methanol downstream of an indirect black liquor heater may be preferable.

Addition point <u>must</u> be upstream of refractometers.

Although methanol has some water content, it cannot be added to black liquor before final concentration is reached because evaporators are an original source of methanol. Returning methanol to the evaporators will build the concentration of methanol rather than dispose of methanol.

If methanol is fed to a system that partially recirculates into an atmospheric tank, that tank should either be vented to the atmosphere at a safe elevation outside of the boiler building, or collected into an NCG system. An alternative is to use a pressurized tank that flashes back to the evaporators. Note that any venting of this source should comply with the appropriate environmental regulations.

Caution must be taken with the inspection and maintenance of any of the tanks and associated equipment described in the above paragraph due to possible presence of methanol. This should be covered under the "management of change" procedure.

How: Include a "management of change" procedure when you are designing or modifying a system to blend methanol with black liquor.

Methanol flow rate must be measured to maintain a safe black liquor to methanol ratio. A safe upper limit is 1% by volume of pure methanol due to its volatile nature and potential instability.

Blend with black liquor using in-line mixing. An injection quill that places the waste stream in the center of the black liquor pipe will provide better mixing resulting in more consistent liquor burning.

Methanol should be fed continuously to provide consistent refractometer readings.

Be aware of the possibility of methanol build-up in black liquor piping high points.

Methanol must be isolated with a double isolation valve arrangement located near the methanol injection point in the black liquor line. This location minimizes residual methanol drainage into black liquor after the valves shut.

Interlocks: Boiler must be operated in accordance with the Safe Firing of Black Liquor Guidelines.

Methanol can only be added to the liquor system only when the operation of the recovery boiler is stable and firing liquor at a minimum load of 50% MCR.

When safe firing system trips the black liquor system feed, the methanol feed is isolated by a minimum of two positive means of isolation. This can be accomplished by stopping the pump and automatically closing the downstream isolation valve on the methanol feed line, or by automatically closing two isolation valves. Since full recirculation of black liquor only occurs when black liquor is not fired, this interlock also does not allow methanol feed during full recirculation.

Methanol feed must be stopped at the low black liquor solids alarm point. Waste stream addition could be the cause of the low solids alarm, so a reasonable first step when solids are low is to stop waste stream addition.

A minimum black liquor solids content for allowing methanol introduction should be determined and used as a starting permissive for methanol incineration. This permissive can avoid a low solids alarm caused by a drop in refractometer liquor solids due to methanol addition.

Starting and tripping logic diagrams for methanol are included at the end of this methanol section (see Figures 11 and 12).

Measurements: The methanol delivery system must have control room indication when methanol is being introduced.

Flow rate should be measured.

Consider measuring methanol concentration and isolating methanol line if methanol concentration indicates increased water presence.

Consider having high and low flow alarms.

Impacts of combining methanol with the black liquor stream to the recovery boiler:

Heating Value: Higher heating value for 100% methanol is about 9200 Btu/lb.

Volatility: Methanol's boiling point is 148°F. Black liquor sampling upstream of methanol addition will avoid flashing methanol in sample.

Corrosiveness: Corrosive; use stainless steel.

Combustion: Flash point from 54°F (closed cup) as compared to 100°F to 150°F for fuel oil.

Solids Measurement: When firing methanol with black liquor, the black liquor refractive index may decrease, causing an apparent lower solids measurement. The decrease would be due to methanol having a refractive index lower than black liquor. Off-line testing will not be affected by methanol (but there will be an odor during off-line testing.) Operators and Instrument Technicians must understand the effect of methanol on the refractive index and off-line testing. The system must not compromise the minimum solids liquor divert recommended by Safe Firing of Black Liquor.

An off-line solids measurement test must be conducted immediately after introduction or removal of methanol and at 2-hour intervals any time methanol is blended into black liquor. Off-line testing must recognize the odor potential of methanol. After removal of methanol, a second test must be done within 2 hours. The last test provides data for re-establishing correct on-line solids readings.

Methanol may accelerate build-up on the refractive lens resulting in inaccurate readings. The prism wash frequency may increase.

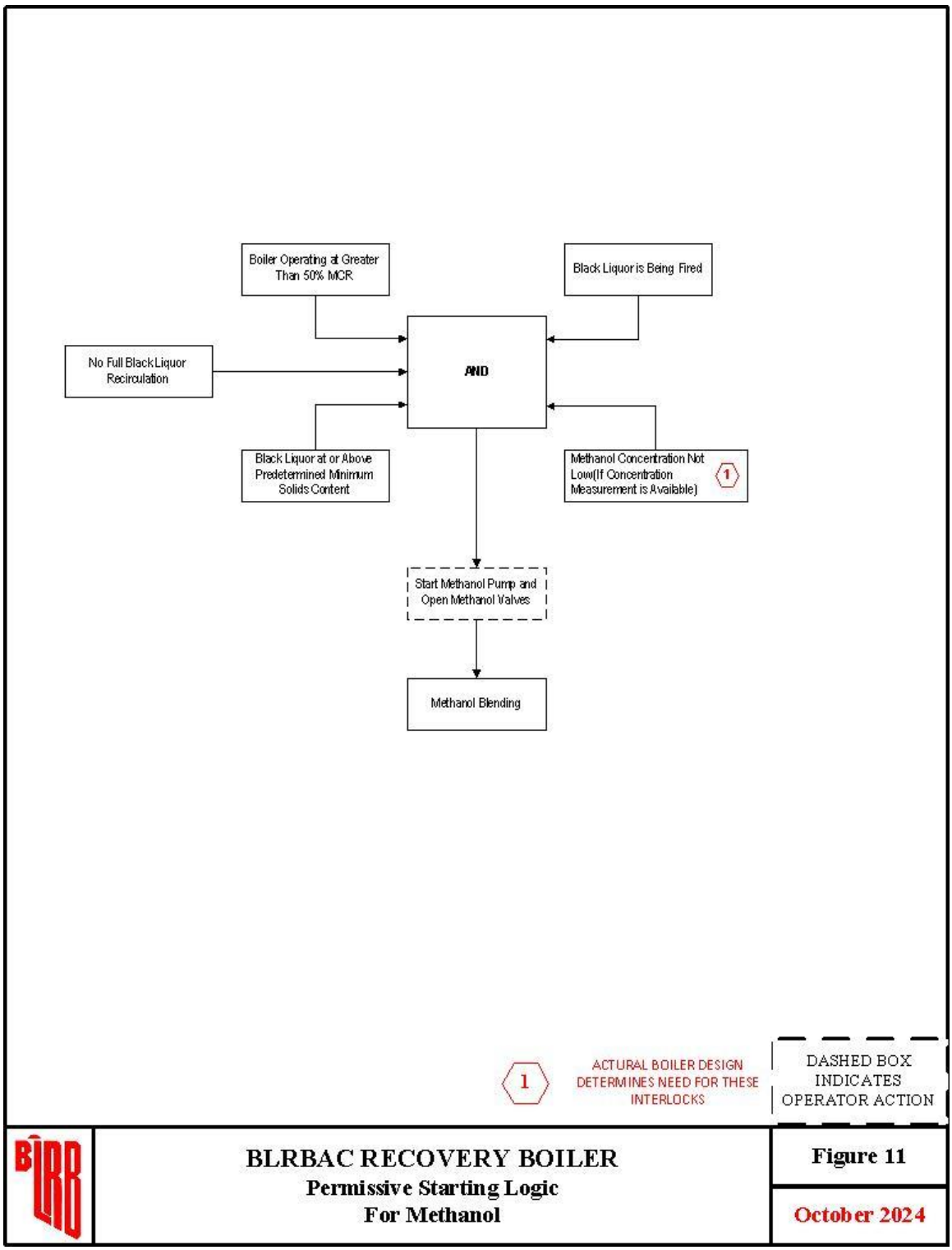

Figure 11 Permissive Starting Logic for Methanol.

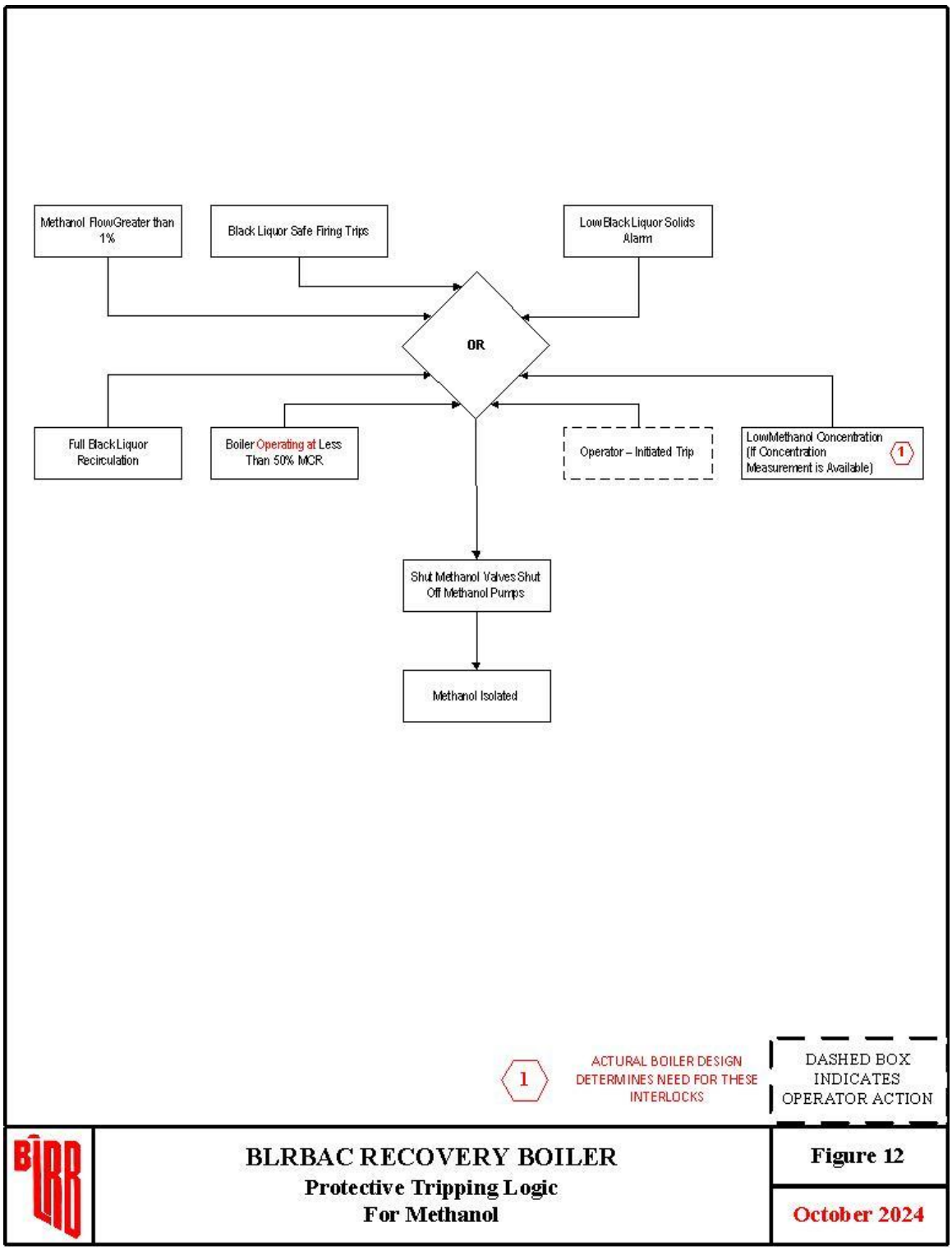

Figure 12 Tripping Logic for Methanol.

6.3 Secondary Sludge

Definition: Secondary sludge is the waste residue resulting from the biological treatment of wastewater. The treatment of wastewater is usually a two-stage process; the first stage (primary treatment) removes suspended solids and fibrous material. The wastewater is then passed on to the secondary treatment where bacteria digest organic material in the wastewater. The residue from the treatment forms a sludge that has a very high moisture content (>90%). The sludge can have a portion of the moisture mechanically removed (i.e. by centrifuge) prior to introduction into the black liquor system.

Safeguards for combining secondary sludge with the black liquor stream to the recovery boiler:

Where: Secondary sludge shall only be introduced into the black liquor system prior to the point of final concentration. The preferred location for introduction is prior to or into the evaporator system.

How: Include a "management of change" procedure when you are designing or modifying a system to blend secondary sludge with black liquor.

Secondary sludge may be introduced into the black liquor system as a separate stream upstream of the evaporators, between evaporator effects, or upstream of the concentrators. Sludge should be introduced into a location that provides adequate blending with black liquor. Sludge blending with black liquor should be on a continuous basis as opposed to batch-process to provide more uniform and predictable performance.

A typical secondary sludge feed rate is approximately 2% of the black liquor solids. This small quantity is not expected to create significant volatility, corrosiveness, or combustion problems in the recovery boiler furnace.

Interlocks: Since the addition of secondary sludge may only be added prior to the point of final concentration, use and design of interlocks will be up to the user.

Measurement: The quantity of secondary sludge delivered to the black liquor system should be monitored.

The secondary sludge delivery system must have control room indication when sludge is being introduced.

Impacts of combining secondary sludge with the black liquor stream to the recovery boiler:

Heating value of liquor: Introducing the sludge in to the black liquor system upstream of the final evaporation stages will minimize the sludge's effect on as-fired heating value and dilution of black liquor solids levels.

Volatility: Based on limited information, the addition of secondary sludge to the black liquor system should not affect liquor volatility.

Corrosiveness: The end user shall determine the impact of secondary sludge on black liquor chemistry to identify the potential for increased corrosion of boiler components. Based on limited information, secondary sludge should not create additional corrosion mechanisms in the black liquor system. Corrosion resistant materials already in use in black liquor systems should be suitable for the dilute mixture of secondary sludge and black liquor.

Combustion: Based on limited information, the addition of secondary sludge to the black liquor upstream of the concentrators may have a favorable impact due to a slight increase in liquor heating value.

Solids measurement: Secondary sludge may accelerate the buildup on the optical components of the solids measuring devices (refractometers), requiring more frequent cleaning and calibration.

6.4 Soap

Definition: Black liquor soap is a mixture of resin and fatty acids that is separated from weak and intermediate black liquors. It is removed to avoid scaling and foaming in the evaporators and concentrators. Soap may have commercial value. Softwoods contain more soap than hardwoods, which necessitates soap removal.

Safeguards for combining soap with the black liquor stream to the recovery boiler:

Where: Add soap to black liquor after the point of final concentration.

Due to the nature of soap to separate from firing black liquor at the expected liquor solids concentration, proper mixing of soap and firing black liquor is needed to reduce variability of the as-fired liquor.

To ensure adequate mixing, it is recommended to inject soap upstream of the suction of the ringheader black liquor supply pumps; consider methods for inline mixing or other engineered injection systems. It is critical that soap be prevented from separating from the black liquor after mixing

Addition point must be upstream of refractometers.

On recovery boiler furnaces that recirculate portions of the ringheader liquor back to upstream liquor storage tanks, intermittently or continuously, blended soap can accumulate in storage tanks on top of the firing liquor. Accumulated soap can result in potential operational upsets, such as drifts in downstream refractometer measurements at sufficiently high soap concentrations, pumping challenges due to high viscosity, an elevated BTU mixture, or other challenges.

How: Include a "management of change" procedure when you are designing or modifying a system to blend soap with black liquor.

It is recommended to blend black liquor using in-line mixing; alternative designs may resolve the needed blending with engineered solutions that focus on pipeline mixing using other methods.

When soap is fed, it is recommended to feed continuously at a consistent ratio of soap to as-fired liquor to provide a consistent boiler operation and refractometer readings. It is recommended to review the maximum soap to liquor ratio with the boiler OEM. Soap flow measurement can be accomplished with in-line devices that measure both flow and density, such as a Coriolis meter. The density can be used to verify the quality of the soap.

Soap must be isolated with a double automated isolation valve arrangement located near the soap injection point in the black liquor line. This location minimizes residual soap

drainage into black liquor after the valves shut during liquor recirculation or when the soap addition needs to be halted.

Consideration needs to be made to address the soap supply line when not in service. Idle soap lines will cool, increase soap viscosity and potentially plug. Designs should be made to provide a method to purge soap and recirculate soap systems to minimize potential issues when resuming firing of soap.

The upper limit on soap firing should be established by assuming that if the soap flow were 100% water, the black liquor solids concentration would not fall below minimum safe firing level.

Interlocks: Boiler must be operated in accordance with the Safe Firing of Black Liquor Guidelines.

Soap can only be added to the liquor system when the operation of the recovery boiler is stable and firing liquor at a minimum load of 50% MCR.

When the safe firing system trips the black liquor system feed, the soap feed is isolated by automatically closing both isolation valves on the soap feed line. The soap pump can continue to run, allowing soap to recirculate when not being blended with black liquor. Since full recirculation of black liquor only occurs when black liquor is not being fired, this interlock also does not allow soap feed during full recirculation, preventing build-up of soap in the black liquor system.

Soap feed must be stopped at the low black liquor solids alarm point. Waste stream addition could be the cause of the low solids alarm, so a reasonable first step when solids are low is to stop waste stream addition.

A minimum black liquor solids content for allowing soap introduction should be determined and used as a starting permissive for soap incineration. This permissive can avoid a low solids alarm caused by a drop in refractometer liquor solids due to soap addition.

Starting and tripping logic diagrams for soap are included at the end of this soap section (see Figures 13 and 14).

Measurement: The soap delivery system must have control room indication when soap is being introduced.

The soap delivery system should have either a flow meter or a delivery system design that will maintain soap in proportion to the liquor flow.

Consider using an in-line device to determine the amount of water in soap. Soap density measurement is a proven method of monitoring water content.

Impacts of combining soap with the black liquor stream to the recovery boiler:

Heating Value: Soap has a greater heating value than black liquor.

Corrosiveness: Not corrosive.

Volatility: Low

Flow: Potential risk of increased plugging; increased black liquor viscosity or viscosity variability.

Tankage: Soap that has accumulated in storage tanks could potentially surge or cause non-uniform black liquor flow. There is an elevated risk following upset conditions or extended outages.

Combustion: Addition of soap will increase the liquor HHV. Soap burns more aggressively than black liquor resulting in a hotter fire and smaller bed. A sudden change in soap input could potentially result in smelt runoff due to the sudden increase in furnace heat input. Operators must adjust to the burning characteristics of soap. Consider monitoring variables such as steaming rate to liquor firing rate ratios as a simple cross-check for changes in the furnace conditions due to soap injection.

Solids Measurement: When firing soap with black liquor, the black liquor refractive index will decrease, causing an apparent lower solids measurement. The decrease would be due to soap having a refractive index lower than black liquor. Off-line testing will include soap solids as part of black liquor solids so the results will be higher than actual black liquor solids content. Operators and Instrument Technicians must understand the effect of soap on the refractive index and off-line testing. The system must not compromise the minimum solids liquor divert recommended by Safe Firing of Black Liquor.

An off-line solids measurement test must be conducted immediately after introduction or removal of soap and at 2-hour intervals any time soap is blended into black liquor. Addition of soap can give a false high reading for the off-line solid's measurement field test. After removal of soap, a second test must be done within 2 hours. The last test provides data for re-establishing correct on-line solids readings.

The soap can coat the refractive lens resulting in inaccurate readings. The prism wash frequency will increase.

Increasing the quality of soap mixing will cause fewer problems with the refractometers.

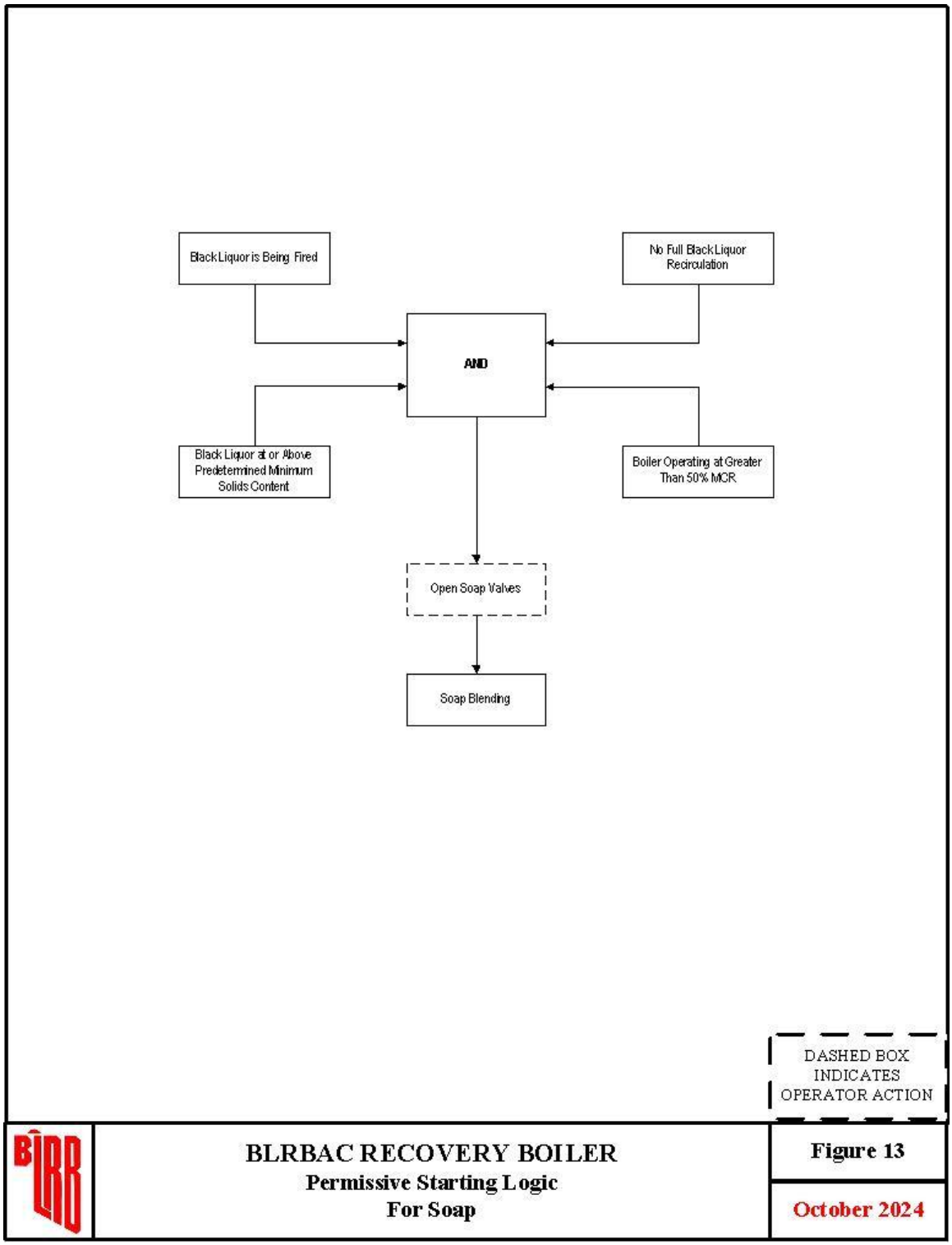

Figure 13 Permissive Starting Logic for Soap.

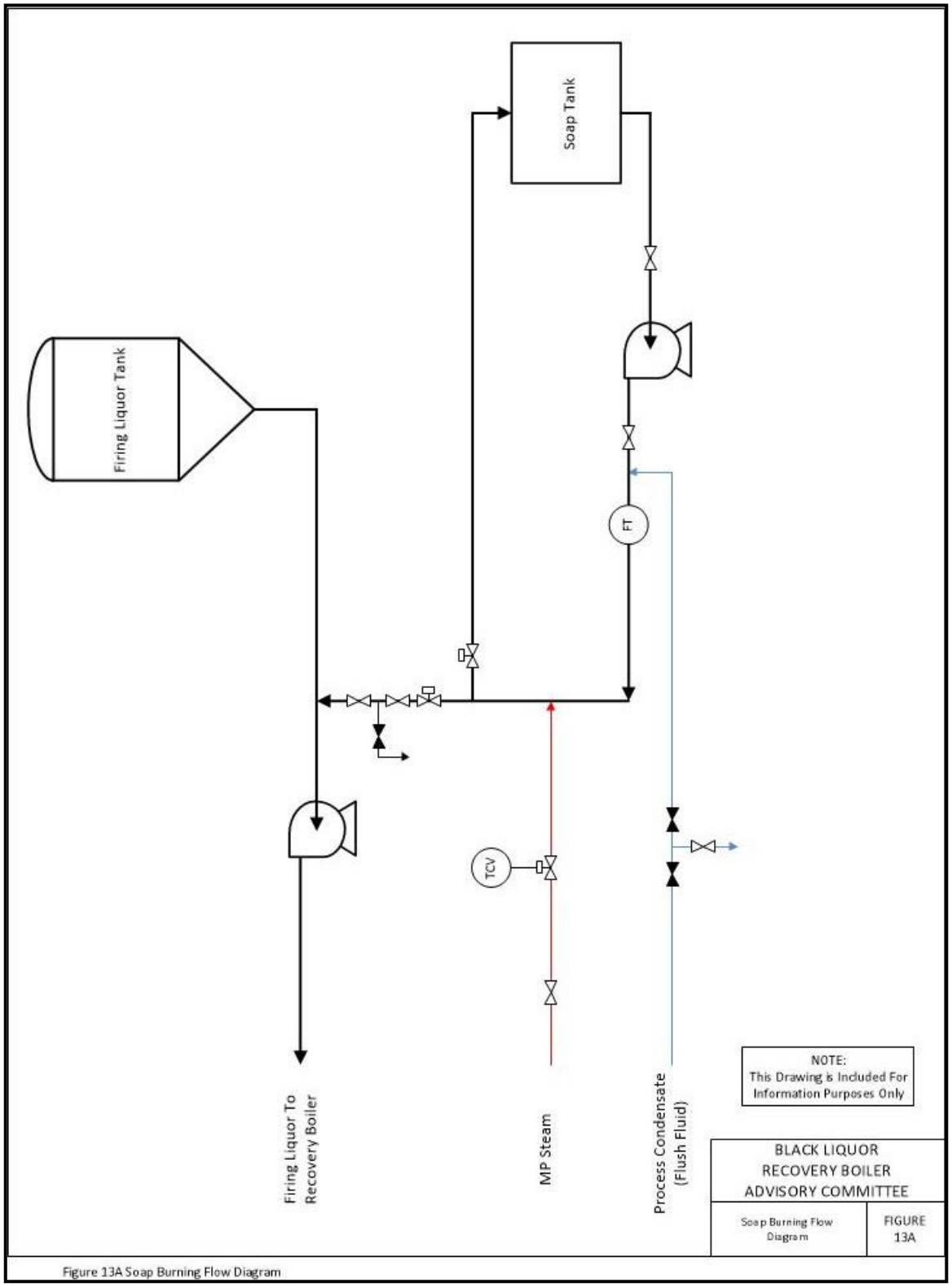

Figure 13A Soap Burning Diagram

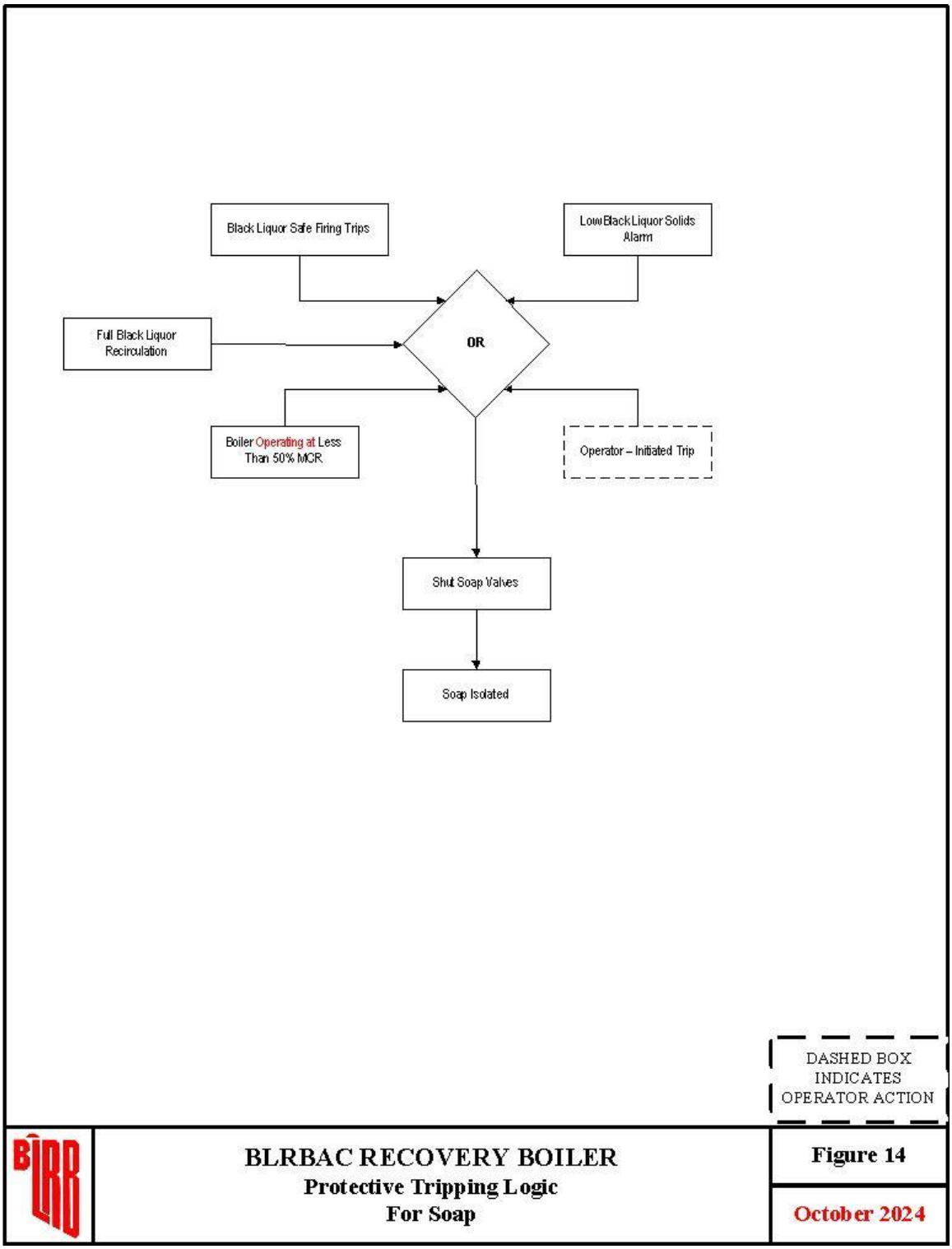

Figure 14 Tripping Logic for Soap.

6.5 Spent Acid from ClO_2 and Tall Oil Brine

Definitions: The aqueous solution by-product from the acidulation of tall oil soap to tall oil, usually consisting primarily of sodium sulfate in water solution. ClO_2 spent acid is the effluent from a ClO_2 generator. It is an aqueous solution containing Na_2SO_4, H_2SO_4, NaCl and $NaClO_3$.

The term "spent acid" will be used to refer to both tall oil brine and ClO_2 spent acid.

Safeguards for combining spent acid with the black liquor stream to the recovery boiler:

Where: Due to water content in this stream, the preferred feed point is prior to the point of final concentration.

To avoid possible evaporator scaling, consider adding the spent acid to the 50% black liquor feed to the concentrators or direct contact evaporator.

How: Include a "management of change" procedure when you are designing or modifying a system to blend spent acid with black liquor.

Neutralize the spent acid before it is added to the black liquor. This will help prevent the black liquor viscosity from increasing and will prevent the formation of H_2S. Neutralization should be to a minimum pH of 10.5.

Tanks in which tall oil spent acid is added to the black liquor should be vented to the NCG system to prevent escape to the atmosphere of any toxic gases formed.

If spent acid is added after final concentration, it should be added continuously to provide consistent refractometer readings.

Spent acid added after the point of final concentration must be isolated with a double isolation valve arrangement located near the spent acid injection point in the black liquor line. This location minimizes residual spent acid drainage into black liquor after the valves shut.

Interlocks: Boiler must be operated in accordance with the Safe Firing of Black Liquor Guidelines.

If added to weak black liquor, addition of spent acid can be independent of black liquor firing rate.

If added to concentrated black liquor after the point of final concentration, spent acid can only be admitted when the operation of the recovery boiler is stable and firing liquor at a minimum load of 50% MCR.

When the safe firing system trips the black liquor feed, the spent acid feed after point of final concentration is isolated by a minimum of two positive means of isolation. This can be accomplished by stopping the pump and automatically closing the downstream isolation valve on the feed line or by closing two isolation valves. Since full recirculation of black liquor only occurs when black liquor is not fired, this interlock also does not allow spent acid feed during full recirculation, preventing buildup of spent acid in liquor storage tanks.

Spent acid feed after the point of final concentration must be stopped at the low black liquor solids alarm point. Waste stream addition could be the cause of the low solids alarm, so a reasonable first step when solids are low is to stop waste stream addition.

If spent acid is added after point of final concentration, a minimum black liquor solids content for allowing spent acid introduction should be determined and used as a starting permissive for spent acid. This permissive can avoid a low solids alarm caused by a drop in refractometer liquor solids due to spent acid addition.

Starting and tripping logic diagrams for spent acid when added after the point of final concentration are included at the end of this spent acid section (see Figures 15 and 16).

Measurement: Spent acid added after point of final concentration must be measured and proportioned to black liquor flow rate.

The spent acid delivery system must have control room indication when spent acid is being introduced.

If neutralized after point of final concentration, neutralization system must have boiler control room indicators and alarms for operating out of normal range.

Spent acid added after point of final concentration must have control room flow read out to avoid excess dilution

Impacts of combining spent acid with the black liquor stream to the recovery boiler:

Heating Value: Addition of spent acid will reduce the heating value of the black liquor.

Volatility: Could have H_2S release during pH excursion.

Corrosiveness: Is corrosive, and this must be considered in piping and injection interface design.

Combustion: Non-combustible but could have H_2S

Solids Measurement: Spent acid might lower the black liquor refractometer solids reading by precipitating out lignins if not neutralized. Refractometers do not “see”

suspended solids so they will not detect precipitated lignin. Spent acid does not affect off-line testing. Operators and Instrument Technicians must understand the effect of spent acid on the refractive index and off-line testing. The system must not compromise the minimum solids liquor divert recommended by Safe Firing of Black Liquor.

When adding after point of final concentration an off-line solids measurement test must be conducted immediately after introduction or removal of spent acid and at 2-hour intervals any time spent acid is blended into black liquor. After removal of spent acid, a second test must be done within 2 hours. The last test provides data for re-establishing correct on-line solids readings.

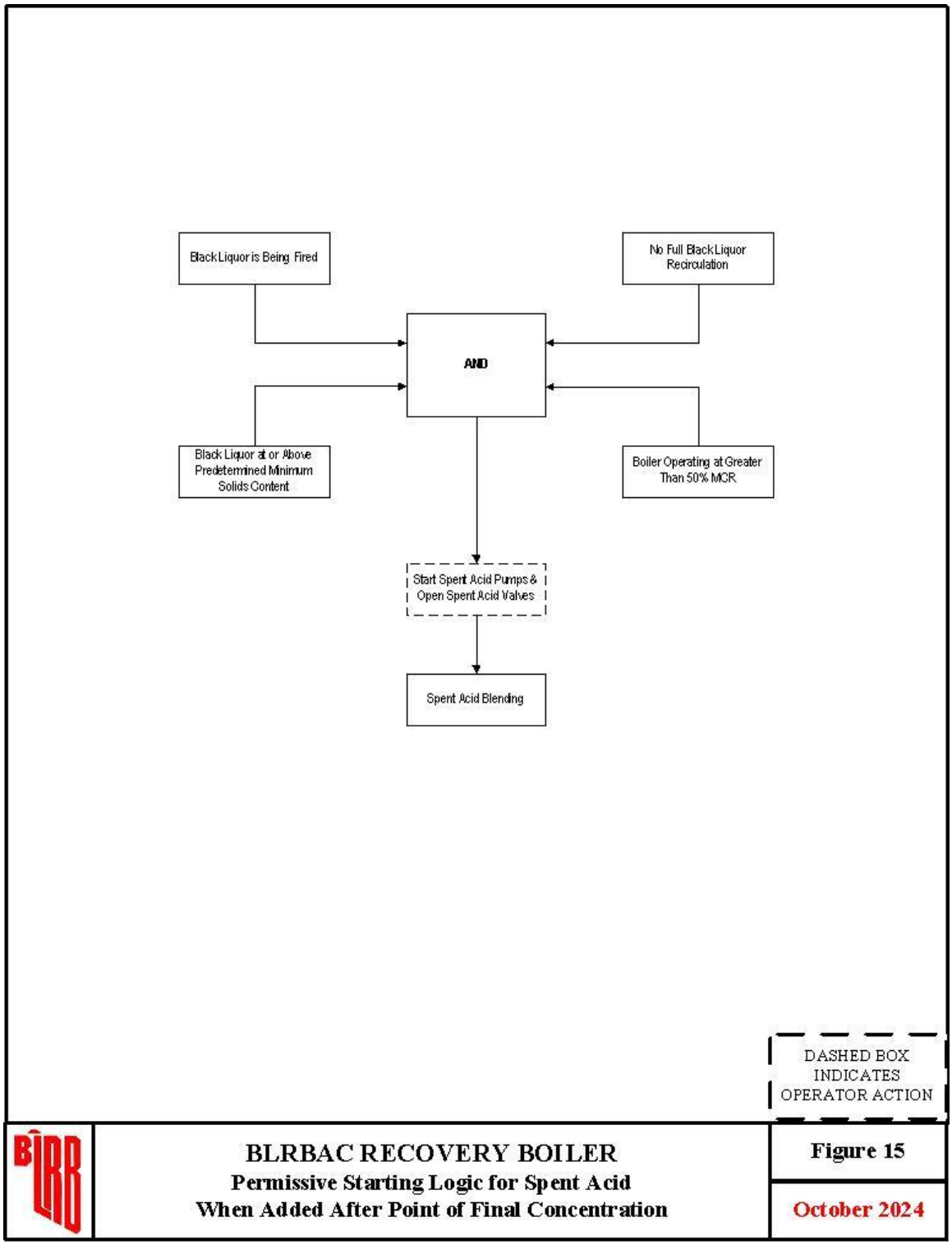

Figure 15 Permissive Starting Logic for Spent Acid when added after Point of Final Concentration.

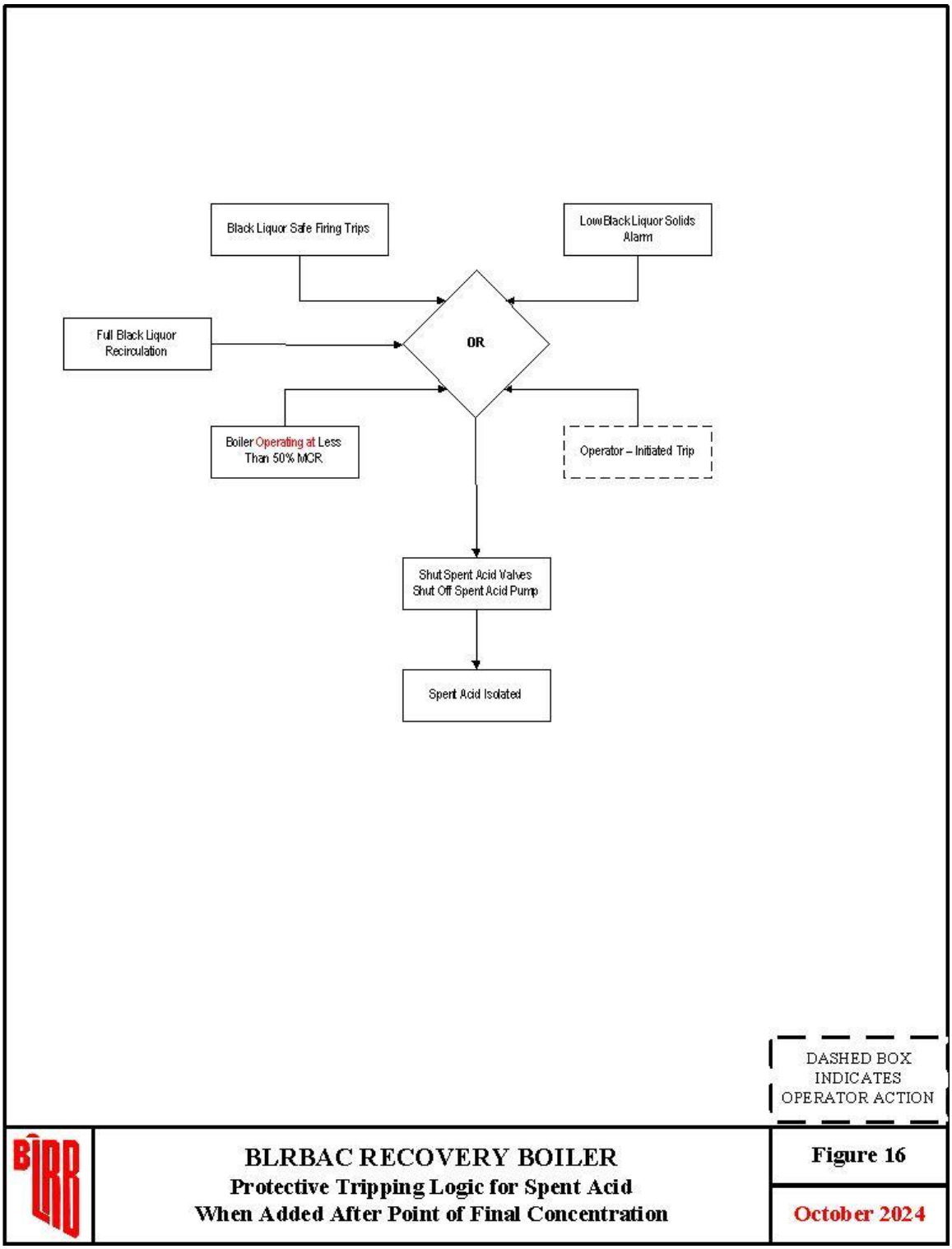

Figure 16 Tripping Logic for Spent Acid when added after Point of Final Concentration.

6.6 Tall Oil

Definition: Tall oil is a mixture of fatty acids, rosin and neutral materials resulting from the acidulation of soap skimmings from kraft black liquor. Specific gravity is approximately 0.9. Heating value for tall oil is in the range of 16,000 to 18,000 BTU/Lb.

Safeguards for combining tall oil with the black liquor stream to the recovery boiler:

Where: Due to low specific gravity, add tall oil to black liquor after the point of final concentration in black liquor piping downstream of tankage including the salt cake mix tank. To ensure adequate mixing, consider adding the tall oil to the suction of the black liquor fuel pumps. If not added to the black liquor pump suction, the addition should occur far enough upstream in the piping to ensure proper mixing.

Addition point must be upstream of refractometers.

Tall oil blending in a liquor firing system that continuously recirculates a portion of the liquor stream to tanks must have continuous agitation in the tanks to avoid separation of tall oil and liquor. The black liquor pump suction is another acceptable destination for partial recirculation black liquor containing tall oil.

How: Include a "management of change" procedure when you are designing or modifying a system to blend tall oil with black liquor.

Blend with black liquor using in-line mixing.

Ensure consistent refractometer reading by feeding tall oil continuously.

Tall oil must be isolated with a double isolation valve arrangement located near the tall oil injection point in the black liquor line. This location minimizes residual tall oil drainage into black liquor after the valves shut.

The upper limit on tall oil firing should be established by assuming that if the tall oil flow were 100% water, the black liquor solids concentration would not fall below minimum safe firing level.

Interlocks: Boiler must be operated in accordance with the Safe Firing of Black Liquor Guidelines.

Tall oil can only be added to the liquor system when the operation of the recovery boiler is stable and firing liquor at a minimum load of 50% MCR.

When the safe firing system trips the black liquor system feed, the tall oil feed is isolated by automatically closing both isolation valves on the tall oil feed line. The tall oil pump can continue to run, allowing tall oil to recirculate when not being blended with black

liquor. Since full recirculation of black liquor only occurs when black liquor is not being fired, this interlock also does not allow tall oil feed during full recirculation, preventing buildup of tall oil in the black liquor system.

Tall oil blending in a liquor firing system that continuously recirculates a portion of the liquor stream to tanks must have continuous agitation in the tanks to avoid separation of tall oil and liquor.

Tall oil feed must be stopped at the low black liquor solids alarm point. Waste stream addition could be the cause of the low solids alarm, so a reasonable first step when solids are low is to stop waste stream addition.

A minimum black liquor solids content for allowing tall oil introduction should be determined and used as a starting permissive for tall oil incineration. This permissive can avoid a low solids alarm caused by a drop in refractometer liquor solids due to tall oil addition.

Starting and tripping logic diagrams for tall oil are included at the end of this tall oil section (see Figures 17 and 18).

Measurements: Tall oil flow rate must be measured and proportioned to black liquor firing rate.

The tall oil delivery system must have control room indication when tall oil is being introduced.

Impacts of combining tall oil with the black liquor stream to the recovery boiler:

Heating Value: Tall oil heating value is in the range of 16,000 to 18,000 Btu/lb. Thus the heat release of the tall oil will be considerably higher than that of black liquor.

Volatility: Not volatile at handling temperatures.

Corrosiveness: Not corrosive.

Combustion: Flash point is from 385°F to 420°F as compared to 100°F to 150°F for fuel oil.

Solids Measurement: Addition of tall oil will lower the refractive index, making the refractometers read a lower solids than actual. The decrease would be due to tall oil having a refractive index lower than black liquor. Operators and Instrument Technicians must understand the effect of tall oil on the refractive index. The system must not compromise the minimum solids liquor divert recommended by Safe Firing of Black Liquor.

An off-line solids measurement test must be conducted immediately after introduction or removal of tall oil and at 2-hour intervals at any time tall oil is blended into black liquor.

After removal of tall oil, a second test must be done within 2 hours. The last test provides data for re-establishing correct on-line solids readings.

The tall oil can coat the refractive lens resulting in inaccurate readings. The prism wash frequency will increase.

Increasing the quality of tall oil mixing will cause fewer problems with the refractometers.

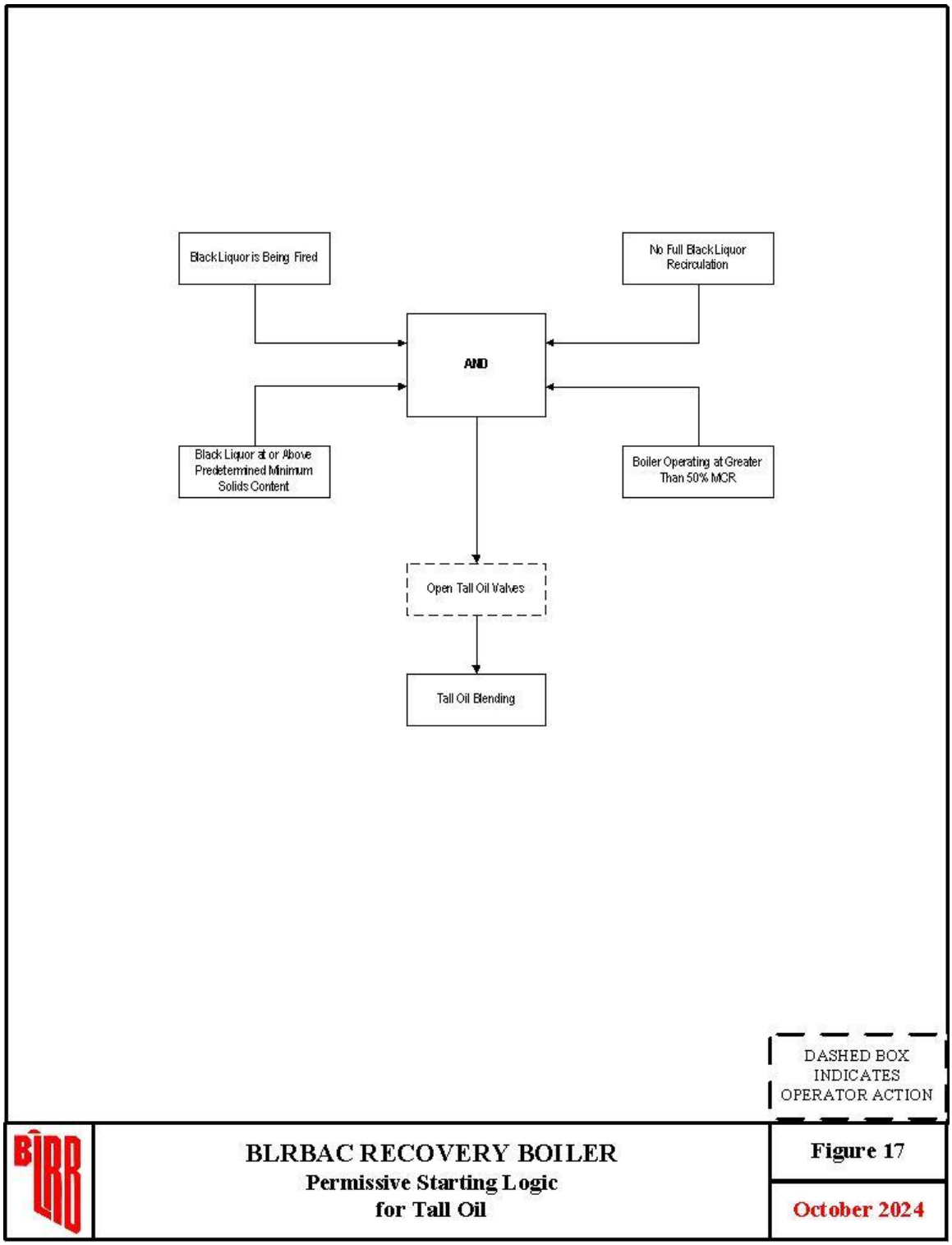

Figure 17 Permissive Starting Logic for Tall Oil.

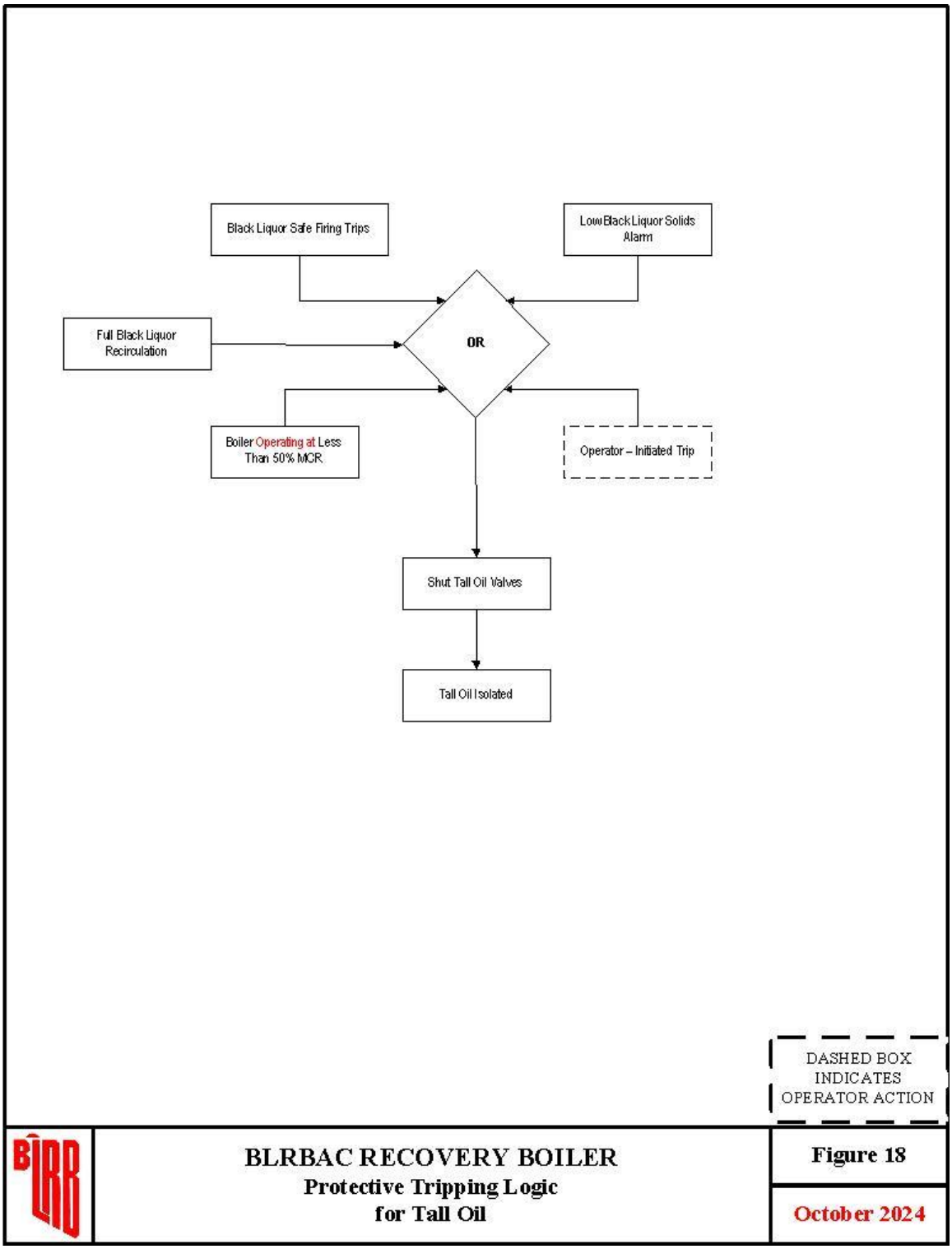

Figure 18 Tripping Logic for Tall Oil.

6.7 Turpentine

Definition: Most spruces, firs and pines are rich in terpenes that can be recovered from flashing and evaporation of black liquor. Typically contaminated to varying degrees with sulfides, crude sulfate turpentine has a market value that is usually high enough that it is preferably sold rather than burned. In cases where the sulfide levels are too high or the terpene composition is of poor quality, incineration may be the only available disposal option.

In addition to direct recovery of turpentine from condensed vapor, foul condensate stripping systems can generate sulfide-rich foul turpentine, or "Red Oil" that is not marketable. Most stripping systems are designed and operated to keep the turpentine vaporized in the methanol-rich Stripper Off-Gas. Some existing older designs still generate a decanted oil layer that requires special handling and disposal.

Generation rates in Kraft batch mills where turpentine quality is generally good are about 0.5-1.5 gallons/bdt softwood chips. Continuous Kraft cooking generates between 0.3-1.0 gallons of turpentine/bdt chips.

Mills that produce poor quality turpentine also typically generate less overall, usually between 0.1-0.15 gallons/bdt chips. On a 75% black liquor solids basis, this amounts to about 0.05% by volume. Addition of Stripper-generated "Red Oil" may increase this rate to 0.1%. For example, a mill that burns 400 gpm of heavy liquor will have a turpentine flow of about 0.4 gpm, or 1.5 L/min. Some mills are firing black liquor blended with up to 1% turpentine by volume.

Safeguards for combining turpentine with the black liquor stream to the recovery boiler:

Where: Add turpentine to black liquor after the point of final concentration in black liquor piping downstream of tankage including the salt cake mix tank to minimize the possibility of explosive gases in the vapor space in tanks.

Addition should occur far enough upstream in the piping to ensure adequate mixing.

Because of the high recirculation rate in the heating loop, it may be preferable to inject turpentine downstream of the black liquor indirect heater system.

Turpentine injection must be downstream of a direct heater to prevent flashing of turpentine when the loss of steam desuperheating results in the steam temperature exceeding 350F.

The addition point <u>must</u> be upstream of refractometers.

How: Include a "management of change" procedure when you are designing or modifying a system to blend turpentine with black liquor.

If turpentine is fed to a system that partially recirculates to an atmospheric tank, that tank should either be vented to the atmosphere at a safe elevation outside of the boiler building, or collected into an NCG system. An alternative is to use a pressurized tank that flashes back to the evaporators. Note that venting of this source should comply with the appropriate environmental regulations.

Caution must be taken with the inspection and maintenance of any of the tanks and associated equipment described in the above paragraph due to possible presence of turpentine. This should be covered under the "management of change" procedure.

Turpentine flow must be metered by continuous injection to maintain a safe black liquor to turpentine ratio and to provide consistent refractometer readings. A suggested upper limit is 0.5% by volume of turpentine in black liquor.

Blend with black liquor using in-line mixing via direct injection. An injection quill that places the waste stream in the center of the black liquor pipe will provide better mixing resulting in more consistent liquor burning.

As with methanol solution, crude sulfate turpentine and "Red Oil" are high in odorous sulfide and nitrogen compounds that can permeate furnace wall deposits and generate operating floor odors in the event of furnace pressure upsets.

Turpentine must be isolated with a double isolation valve arrangement located near the turpentine injection point in the black liquor line. This location minimizes residual turpentine drainage into black liquor after the valves shut.

Interlocks: Boiler must be operated in accordance with the Safe Firing of Black Liquor Guidelines.

Turpentine can only be added to the liquor system when the operation of the recovery boiler is stable and firing liquor at a minimum load of 50% MCR.

When the safe firing system trips the black liquor system feed, the turpentine feed is isolated by a minimum of two positive means of isolation. This can be accomplished by stopping the pump and automatically closing the downstream isolation valve on the turpentine feed line or by automatically closing two isolation valves. Since full recirculation of black liquor only occurs when black liquor is not fired, this interlock also does not allow turpentine feed during full recirculation.

Turpentine feed must be stopped at the low black liquor solids alarm point. Waste stream addition could be the cause of the low solids alarm, so a reasonable first step when solids are low is to stop waste stream addition.

A minimum black liquor solids content for allowing turpentine introduction should be determined and used as a starting permissive for turpentine incineration. This permissive can avoid a low solids alarm caused by a drop in refractometer liquor solids due to turpentine addition.

All turpentine injection should be stopped well in advance of any planned removal of a liquor gun or nozzle to allow sufficient time to purge turpentine-bearing liquor from the system.

Starting and tripping logic diagrams for turpentine are included with this turpentine section.

Measurements: The turpentine delivery system must have control room indication when turpentine is being introduced.

The flow rate shall be measured.
Consider having high and low flow alarms.

Impacts of combining turpentine with the black liquor stream to the recovery boiler:

- **Heating Value:** Higher heating value for 100% turpentine is about 19,000 Btu/lb.
- **Volatility:** Turpentine's boiling point is about 300°F.
- **Corrosiveness:** Corrosive due to sulfide content; use stainless steel, preferably welded fittings.
- **Combustion:** Flash point for pure turpentine is about 95°F (closed cup) as compared to 100°F to 150°F for fuel oil; however, sulfide content can lower the measured values to <50°F. Auto-ignition temperature of turpentine is 400°F.
- **Solids Measurement:** When firing turpentine with black liquor, the black liquor refractive index will slightly decrease, causing an apparent lower solids measurement of up to 0.6% for a 1% by volume addition of turpentine. The decrease would be due to turpentine having a refractive index lower than black liquor. Off-line testing method will not be affected by turpentine (but there may be an odor during off-line testing.), but results may be slightly lower percent solids due to vaporization of turpentine during the cook techniques. The percentage lower would be dependent on percent volume of turpentine. Operators and Instrument Technicians must understand the effect of turpentine on the refractive index and off-line testing. The system must not compromise the minimum solids liquor divert system recommended by Safe Firing of Black Liquor.

- An off-line solids measurement test must be conducted immediately after introduction or removal of turpentine and at 2-hour intervals any time turpentine is blended into black liquor. Off-line testing must recognize the odor potential of turpentine.

- Turpentine addition is not expected to accelerate build-up on the refractive lens.

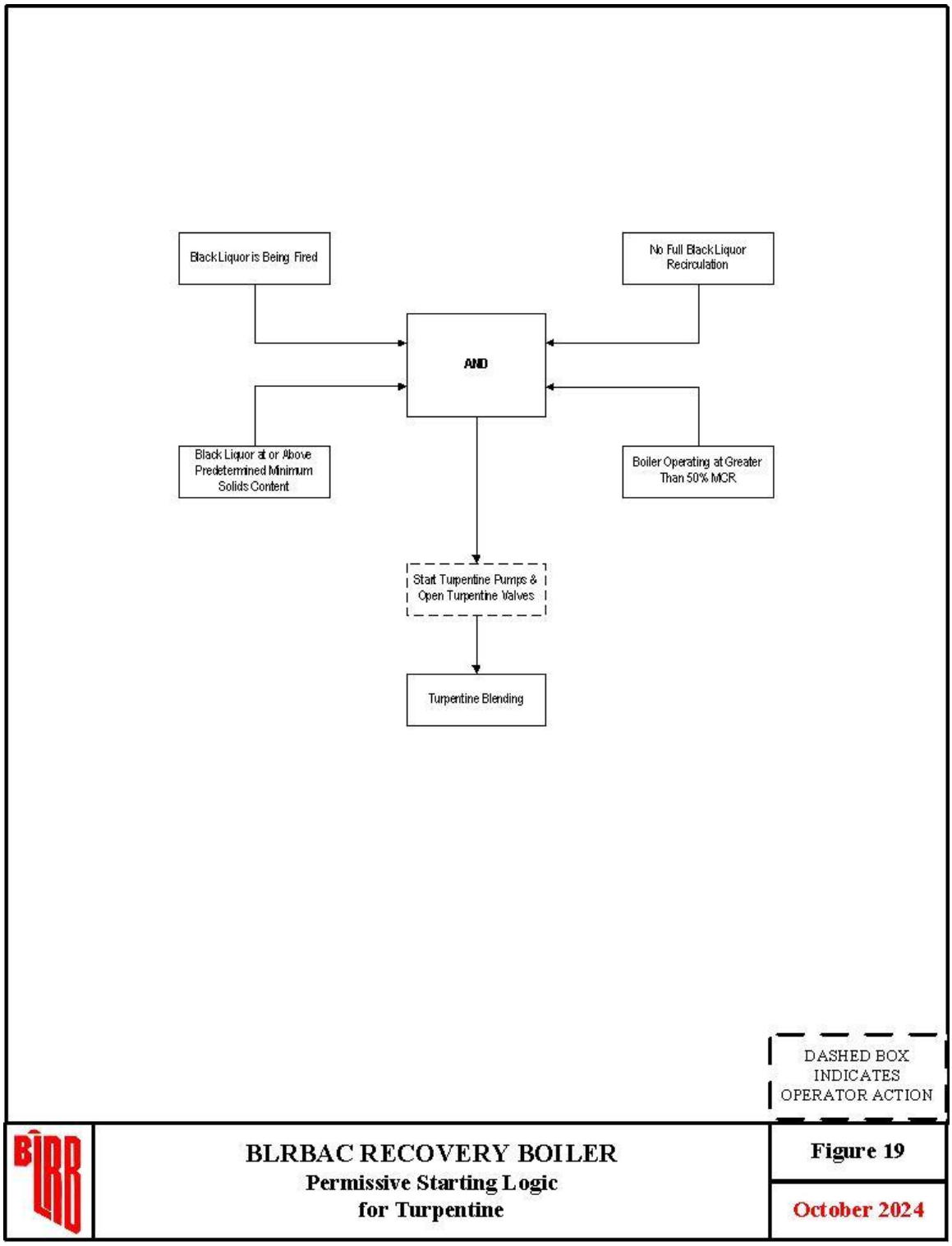

Figure 19 Permissive Starting Logic for Turpentine.

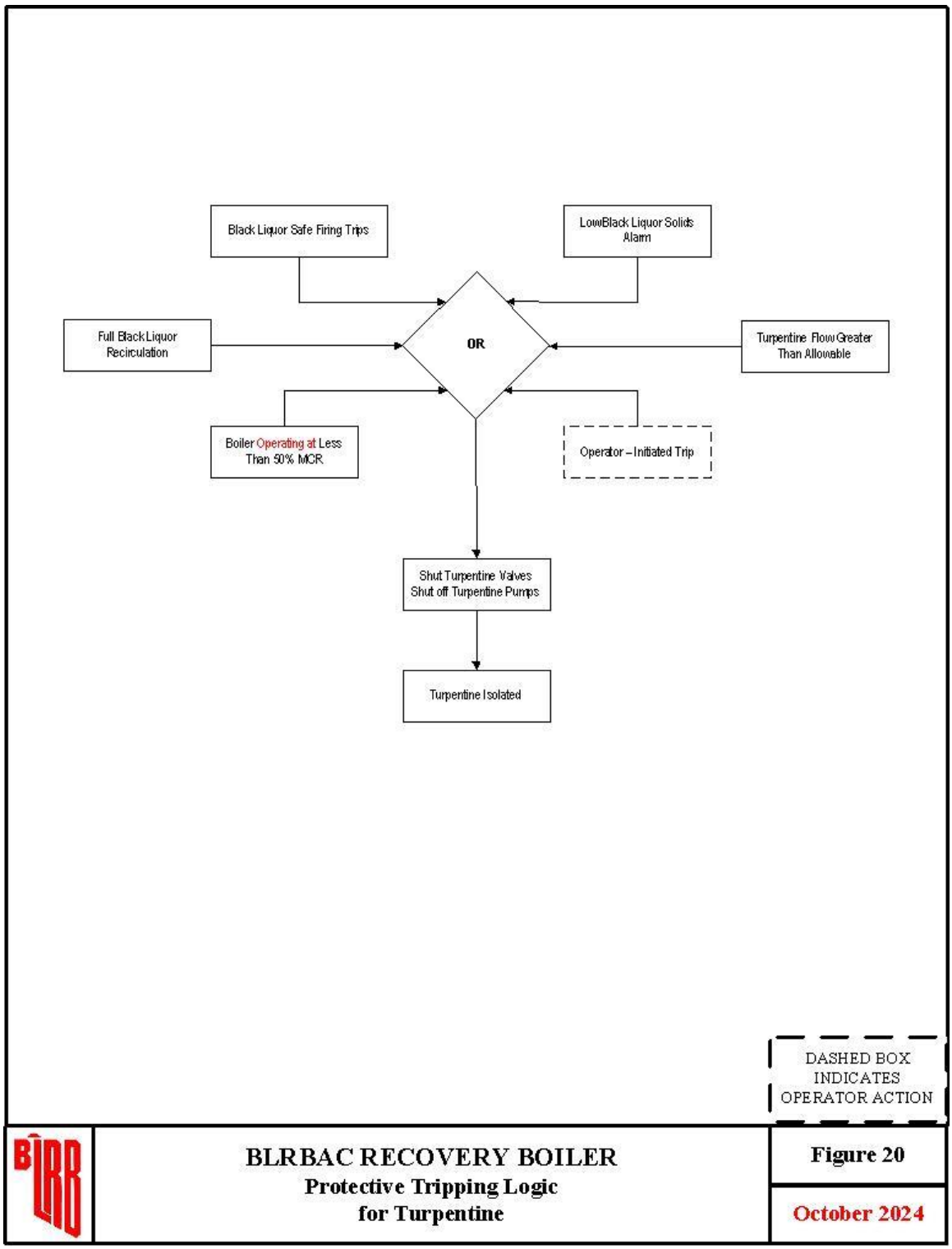

Figure 20 Tripping Logic for Turpentine.

CHAPTER 7 GUIDELINES FOR THERMAL OXIDATION OF LIQUID WASTE STREAMS IN DEDICATED BURNERS

7.1 Introduction

Chapter 7 describes the use of dedicated burners as the control devices for thermal oxidation of liquid waste streams in recovery boilers. While many liquid waste streams are generated in the chemical recovery and wood pulping processes, this guideline is applicable only to combustible liquid waste streams. The most common liquid waste streams that meet this requirement are methanol, turpentine and tall oil. These liquid streams may be fired separately, or in a blended combination. A dedicated burner may not be the best location to oxidize these streams, and there may be other waste streams that have similar characteristics to these streams that are not specifically mentioned in this document. The purpose of this document is to describe recommended guidelines for thermal oxidation of any liquid waste stream in dedicated burners, with additional information provided for the waste streams considered to be the most common candidates for such incineration.

Attempting to oxidize a non-combustible liquid waste stream in a dedicated burner may be an ineffective oxidation method at best, and a possible hazard to safe boiler operation. Non-combustible liquid waste streams should be disposed of by means other than a dedicated burner in a recovery boiler. These streams include, but are not limited to spent acid and secondary sludge.

The thermal oxidation of liquid waste streams in dedicated burners in recovery boilers is very similar to the firing of fuel oil in auxiliary burners in recovery boilers. The basic physical characteristics of the equipment and materials involved are very similar. The recommendations described in the "Recommended Good Practice for Safe Firing of Auxiliary Fuels in Black Liquor Recovery Boilers," with some specific additional recommendations, apply directly to the thermal oxidation of liquid waste streams in dedicated burners in recovery boilers. These specific additional recommendations are described in this chapter.

These recommendations should be followed in addition to those given for fuel oil fired burners in the "Recommended Good Practice for Safe Firing of Auxiliary Fuels in Black Liquor Recovery Boilers." In the case of the dedicated liquid waste stream burner, the liquid waste stream is treated as an "Auxiliary Fuel" for the burner. This is a direct contradiction of the definition of an Auxiliary Fuel given in the "…Safe Firing of Auxiliary Fuel…" guideline, but it is necessary for the purposes of this guideline and it does not violate the spirit of the recommendations for auxiliary fuels. Consideration of the heating pattern generated by the liquid waste stream burner will be of limited importance in most cases. As a matter of clarity, the auxiliary fuel guidelines specific to gas fired main burners will not apply to liquid waste stream burners.

7.2 Safety

7.2.1 System Safety

For the purpose of this guideline, liquid waste streams that are permissible to fire in a dedicated burner are considered fuels. For specific guidelines concerning the basic acceptable characteristics of liquid waste streams that may be fired in a dedicated burner, please refer to section 7.4 of this document.

During the thermal oxidation of liquid waste streams in dedicated burners, the safety hazards for both personnel and equipment have to be considered. The equipment for thermal oxidation as well as handling and transporting the liquid waste stream has to be designed and controlled such that:

- The liquid waste stream cannot escape into the recovery boiler building.
- Fire and explosion in equipment and piping systems is prevented.
- Positive ignition of the liquid waste stream entering the furnace is provided.
- The boiler should be firing liquor stably or operating at a load of 50% MCR or greater.
- The waste stream does not contain excessive water as determined by density or other appropriate measurements.

At a minimum, the safety requirements for the thermal oxidation of liquid waste streams in a dedicated burner must meet the guidelines presented in the following BLRBAC publications:

- Recommended Good Practice for the Safe Firing of Auxiliary Fuels in Black Liquor Recovery Boilers
- Recommended Good Practice for the Safe Firing of Black Liquor in Black Liquor Recovery Boilers
- Recommended Rules for Personnel Safety for Black Liquor Recovery Boilers
- Instrumentation Checklist and Classification Guide for Instruments and Controls Used in Operation of Black Liquor Recovery Boiler

7.2.2 Personnel Safety

The liquid waste streams must be handled with great care. Each waste stream has unique hazards that must be considered. Some general characteristics of various liquid waste streams, and their associated hazards are discussed in the next section. For more specific risks associated with hazardous compounds present in liquid waste streams, see published health and safety guidelines concerning these compounds. The nature of each liquid waste stream must be clearly understood prior to the design of a dedicated waste stream burner and handling system.

Areas containing liquid waste stream piping and equipment should be monitored in accordance with applicable safety codes.

Routine inspection and repair of the liquid waste stream transport system should be performed at sufficient frequency to prevent leaks in the system and/or malfunction or failure of control devices.

Some tasks associated with the normal operation of a dedicated liquid waste stream burner may potentially expose operators to noxious fumes or other hazards. These hazards must be clearly understood and the proper personal protective equipment (PPE) must be identified and used as needed. Proper system purge, maintenance and lock out procedures must be developed and strictly adhered to.

7.3 Descriptions of Liquid Waste Streams Expected to be Fired in Dedicated Burners

7.3.1 Methanol

Liquid methanol is typically condensed from SOG. SOG consists of approximately 50% methanol vapor by weight. SOG can be converted to a liquid of high methanol concentration and heating value through the process of methanol rectification. This liquid typically has a methanol content of 50% to 80% by weight, but can range from 30% to 90%. Methanol from SOG usually contains TRS, turpenes, and other contaminants that make it noxious. Care should be taken to design dedicated methanol burners and transport systems to limit personnel exposure to methanol vapor and liquid. Proper PPE should be identified for and used by operators of methanol burners. The exposure limits and hazards of other chemicals that might be present in methanol must also be identified and appropriate protective measures must be taken.

Physical & Chemical Properties
Physical State: Liquid
Appearance: clear, colorless
Odor: alcohol-like – weak odor
pH: N/A
Vapor Pressure: 127 mm Hg @ 25°C
Vapor Density: 1.11 (Air = 1)
Evaporation Rate: 2 (Butyl acetate = 1)
Viscosity: 0.55 cP @ 20°C
Boiling Point: 64.7° C @ 760.00 mm Hg
Freezing/Melting Point: -98°C
Auto-ignition Temperature: 464°C (867.20°F)
Flash Point: 11°C (51.80°F) or less depending on Sulfur content
NFPA Rating: (estimated) Health: 1; Flammability: 3; Reactivity: 0
Explosion Limits, Lower: 6.0 vol %;Upper: 36.00 vol %
Solubility in water: miscible
Specific Gravity/Density: 0.7910g/cm3

The above properties are for pure methanol and may vary significantly depending on the concentration of contaminants, such as sulfur compounds, in the methanol stream.

7.3.2 Turpentine and Red Oil

Sulfate turpentine is a by-product of the pulping of softwood. Sulfate turpentine is collected from digester relief gases, and may contain additional hazardous chemicals such as dimethyl sulfide, dimethyl disulfide and methyl mercaptan. Red oil, such as that decanted from foul condensate stripping systems is considered the same as turpentine in this chapter. Turpentine is explosive and has an undefined upper explosion limit. Turpentine is noxious. Care should be taken to design dedicated turpentine burners and transport systems to limit personnel exposure to turpentine vapor and liquid. Proper PPE should be identified for and used by operators of turpentine burners.

Physical & Chemical Properties
Physical State: Liquid
Appearance: clear to dark brown
Odor: foul Kraft pulp mill odor
pH: N/A
Vapor Pressure: 5 mm Hg @ 25°C
Vapor Density: 4.8 (Air = 1)
Evaporation Rate: 0.4 (Butyl acetate = 1)
Viscosity: N/A
Boiling Point: 119° C to 173°C @ 760.00 mm Hg
Freezing/Melting Point: -50° C to -60°C
Auto-ignition Temperature: 253°C (488° F)
Flash Point: 23° C to 35°C (73° F to 95°F) or less depending on sulfur content
NFPA Rating: (estimated) Health: 2; Flammability: 3; Reactivity: 0
Explosion Limits, Lower: 0.8 vol %; Upper: Unknown
Solubility in water: 0.023% @ 25°C
Specific Gravity/Density: 0.87g/cm3

The above properties are for pure turpentine and may vary significantly depending on the concentration of contaminants, such as sulfur compounds, in the turpentine stream.

7.3.3 Crude Tall Oil

Crude tall oil is a mixture of fatty acids, rosin and neutral materials resulting from the acidulation of soap skimmings from Kraft black liquor. The crude tall oil is pumped to the recovery boiler from the crude tall oil storage tank. Care should be taken to design dedicated crude tall oil burners and transport systems to limit personnel exposure to crude tall oil liquid or vapor. Proper PPE should be identified for and used by operators of crude tall oil burners.

Physical & Chemical Properties
Physical State: Liquid
Appearance: amber to dark brown
Odor: acrid
pH: 11 to 12
Vapor Pressure: negligible @ 25°C
Vapor Density: 0 (Air = 1)
Evaporation Rate: under 1 (Butyl acetate = 1)
Viscosity: N/A
Boiling Point: 260°C @ 760.00 mm Hg
Freezing/Melting Point: N/A
Auto-ignition Temperature: N/A
Flash Point: 191° C to 193°C (375° F to 380°F)
NFPA Rating: (estimated) Health: ?; Flammability: ?; Reactivity: ?
Explosion Limits, Lower: N/A; Upper: N/A
Solubility in water: negligible
Specific Gravity/Density: 0.95 to 1.00g/cm3

The above properties are for pure tall oil and may vary significantly depending on the concentration of contaminants, such as sulfur compounds, in the tall oil stream.

7.4 Recommended Waste Stream Characteristics

7.4.1 Basic Acceptable Characteristics for Combustion in a Dedicated Burner

The water content of any liquid waste stream should be minimized. If the liquid waste stream contains water, it should be fully miscible. There should be sufficient heat content in the waste stream to fully evaporate any water it contains. If a liquid waste stream is to contain water, some positive means of monitoring the water content must be used and an acceptable upper limit of water concentration must be established. If this upper limit is exceeded, the liquid waste stream must be diverted from the burner.

The liquid waste stream viscosity should be low enough to allow effective flow and atomization. If the viscosity of the liquid waste stream is too high at ambient temperature, it should be heated until an acceptable viscosity is achieved. Viscosity should also be relatively constant. Significant variation in viscosity can cause poor atomization and flame instability. The expected absolute viscosity limits and variability are to be provided to the burner designer.

The liquid waste stream should be as homogeneous as possible. Homogeneity is important to flame stability. Should the waste stream be a blend of different streams, the multiple streams should be fully miscible to avoid slug flow of different streams.

The liquid waste stream must have a net positive heating value. Wide variation in waste stream heating value during burner operation can cause an unsafe air to fuel ratio at the burner and flame instability. Heating value variation should be maintained within a sufficiently narrow band to avoid these problems. The burner designer must be made aware of the absolute limits of the waste stream heating value and of the potential for variation of heating value.

7.4.2 Characteristics of Class A Waste Streams

Class A waste streams possess characteristics that will allow them to be safely fired in a dedicated burner without a separate continuous positive ignition source. The flame produced by these streams can be effectively scanned and discriminated from other combustion within the furnace. In addition to the basic acceptable characteristics, the key characteristics of these streams are homogeneity, sufficient volatility for positive ignition, and limited variation in heating value and other physical characteristics. The specific limits of each of these characteristics must be defined by the burner designer with consideration of the overall operating environment of the waste stream burner including, but not limited to, combustion air conditions and supply, atomizing medium, flame scanner performance and combustion conditions within the furnace. Class A waste streams may be used to fire support burners for other liquid or gaseous waste streams.

The final decision on classification of waste streams as Class A rests with the burner designer.

7.4.3 Characteristics of Class B Waste Streams

Class B waste streams possess characteristics that will allow them to be safely fired in a dedicated burner with a separate continuous positive ignition source, but are not of sufficient quality to be considered Class A waste streams. This separate ignition source will be of sufficient heat input to provide positive stable ignition of the liquid waste stream based on the requirements of the burner designer. The final decision on classification of waste streams as Class B rests with the burner designer.

7.4.4 Characteristics of Class C Waste Streams

Any liquid waste stream not classified as Class A or B is classified Class C. These streams do not possess the basic acceptable characteristics. These streams must not be fired in dedicated burners. Two examples of these streams are spent acid and secondary sludge.

7.5 Dedicated Burners for Thermal Oxidation

7.5.1 All Dedicated Burners

The waste stream burner(s) should be mechanically suited for installation and operation in a Kraft recovery boiler. Some specific issues might include smelt flow across the burner tip and high radiant heat from the furnace. The ultimate responsibility for the final design of the waste stream burner, including consideration of all the following parameters lies with the burner supplier.

The waste stream burner(s) should have a dedicated air system. The combustion air can be supplied from a separate fan or from a recovery boiler FD fan. Proof of adequate combustion air flow is required as proven by a flow switch or other suitable means.

Liquid waste streams may be conveyed to the burner through independent lines and injected into the flame zone separately. It is acceptable to have multiple separate liquid waste stream atomizers within a single burner. It is also permissible to fire the liquid streams in a blended condition. Should the waste stream be a blend of different streams, the multiple streams should be fully miscible to be classified as a Class A waste stream. Blended waste streams that are not fully miscible must be classified as Class B. The combined maximum total heat input for the liquid waste stream burner must not exceed the maximum heat input for a single burner recommended by the boiler designer. If the burner designer is also an OEM for Kraft recovery boilers, they may set the maximum waste stream burner heat input based on their own design criteria.

The atomizer design and atomizing medium should be selected with consideration of the flash point of the liquid waste stream to prevent flashing of the fluid in the atomizer.

Atomizer design should also consider the viscosity of the waste stream. Heating of the waste stream to achieve sufficiently low viscosity may be acceptable but may present problems with blended streams including streams of both high and low flash points.

The burner should be placed in the high heat zone of the furnace at or below the tertiary air level, at an elevation low enough in the furnace to allow complete burn out of the waste stream before it can exit the furnace. It should be placed in such a manner that disturbances in the main flame and/or igniter flame are avoided so as to not create difficulty with flame detection for either the waste streams or the support flame (if required), or the lighter.

7.5.2 Burners Firing Class A Streams

If the waste stream to be fired is a Class A stream, the dedicated waste stream burner is not required to have a separate continuous positive ignition source. The flame safety system for this type of burner will rely on positive detection of the waste stream flame. This liquid waste burner must be equipped with a flame detection device able to detect the waste stream flame, and able to discriminate that flame against the furnace background. The waste stream flame must have sufficient stability and be located such that it can be effectively detected by the flame scanner.

7.5.3 Burners Firing Class B Streams

Liquid waste burners firing Class B streams must be equipped with a continuous ignition source with sufficient heat input to ensure stable ignition and combustion of the waste stream. The lighter must be equipped with its own independent flame detection device, and it must always run while the liquid waste burner is in service. This lighter should operate during the shutdown of the waste stream burner to combust the waste stream during this typically unstable period, and while purging liquid waste from the burner.

7.6 Protective Starting and Tripping Logic

Unless specifically stated otherwise in this guideline, all general design criteria for dedicated burners for liquid waste streams must meet “Recommended Good Practice for the Safe Firing of Auxiliary Fuels in Black Liquor Recovery Boilers”. As stated in section 7.1, the design and operation of dedicated burners for the thermal oxidation of liquid waste streams is very similar to that of auxiliary fuel burners. This similarity also applies to protective starting and tripping logic. In an attempt to avoid future inaccuracies in the coordination between this guideline and the “Recommended Good Practice for Safe Firing of Auxiliary Fuels in Black Liquor Recovery Boilers,” this document refers to that guideline for most design and logic requirements.

There will be additional logic requirements for dedicated burners for the thermal oxidation of liquid waste streams, but these requirements will be dictated by the specific

waste stream and burner design. The burner designer will be responsible for identifying those logic requirements that are applicable and not described in the "Recommended Good Practice for Safe Firing of Auxiliary Fuels in Black Liquor Recovery Boilers".

Some examples of additional requirements that may be required are:

- The waste stream does not contain excessive water as determined by density or other appropriate measurements.
- The waste stream meets all limits for physical characteristics set by the burner designer, such as minimum and maximum temperature and pressure limits, etc.
- The burner atomizing medium meets all limits for physical characteristics and characteristics in relation to the liquid waste stream set by the burner designer.

CHAPTER 8 GUIDELINES FOR THERMAL OXIDATION OF CHIP BIN NCG

8.1 Introduction

Environmental regulations may require that the vents from most continuous digester chip bins that are pre-steamed are collected and destroyed. This chapter discusses the range of risks that chip bin noncondensible gas (CBNCG) presents, the choices for transporting these gases to a recovery boiler, and how to use a recovery boiler for safely destroying CBNCG.

8.1.1 Safety

During the thermal oxidation of CBNCG, safety for both personnel and equipment must be considered.

CBNCG is ordinarily "malodorous air" that has the potential of becoming flammable under upset operating conditions. Each CBNCG system requires an individual evaluation because each system has a unique combination of risk factors. CBNCG is not a fuel. Systems and equipment for thermal oxidation of CBNCG, as well as the systems and equipment for collection and treatment, should be designed and controlled such that:

- The escape of CBNCG into the recovery building area is prevented insofar as design makes it possible.
- Condensate cannot carry into the recovery boiler.
- Special consideration should be placed on the design of CBNCG systems recognizing that conditions can occur where the concentration can become flammable.
- Surrogate parameters for a CBNCG combustible content above the LEL are used as interlocks to divert CBNCG when it is hazardous. Use of an LEL meter is encouraged. NFPA 69, chapter 6, permits operating at up to 60% LEL when interlocks are in place.
- In no case shall the safety requirements be less restrictive than those presented in the following BLRBAC publications:
    - Recommended Good Practice for the Safe Firing of Auxiliary Fuel in Black Liquor Recovery Boilers
    - Recommended Good Practice for the Safe Firing of Black Liquor in Black Liquor Recovery Boilers
    - Instrumentation Checklist and Classification Guide for Instruments and Control Systems Used in Operation of Black Liquor Recovery Boilers
    - Recommended Rules for Personnel Safety Black Liquor Recovery Boilers

8.1.2 Flammability of CBNCG

Table 10 lists factors that can affect the flammability of CBNCG. An assessment of these at a given site will help the system designer select the most appropriate means for safe handling of these gases.

Table 10 Risk Factors Affecting the Flammability of Chip Bin NCG

Risk Factor	Result
Process Risk Factors	
• Resinous softwoods (Not hemlock nor hardwoods)	• Contributes turpentine
• Eucalyptus	• Contributes volatile oils
• Flash steam pre-steaming	• Contributes TRS, methanol, turpentine, volatile oils
• Early extraction in cont. digester	• Higher turpentine content in flash steam
• Chip pile storage time	• Short term storage decreases volatile losses
• Season	• Low temperatures decrease volatile losses
• Low residual alkali	• Higher TRS in flash steam
Operational Risk Factors	
• Chip level	• Breakthrough of flash steam volatiles
• High top vent temperature	• Volatiles in NCG increase with temperature
• Lower than normal vent temperature	• Returning to normal temp will re-vaporize volatile compounds
• High NCG temperature out of condenser	• Reduces turpentine removal
• Chip bin residence time	• Increases volatile accumulation
• Excessive sweep air	• Reduces condensing efficiency
• Digester start up	• Unstable chip bin operation, high combustible content

The majority of risk factors involve turpentine, which is a product of resinous softwood, and organic sulfides that get returned to the chip bin if digester flash steam is used for pre-steaming. TRS and volatile oils behave similarly. A mill that uses fresh steam for pre-steaming hardwood chips will likely generate CBNCG having lower flammable gas concentrations than a mill that pre-steams softwood chips with extraction liquor flash steam. The following summarizes the decreasing risk of generating flammable NCG concentrations:

Softwood Chips >> Softwood Chips = Hardwood Chips > Hardwood Chips
Flash Steam Fresh Steam Flash Steam Fresh Steam

8.2 Collection and Transfer of CBNCG

8.2.1 CBNCG Conditioning System

The intent of the CBNCG conditioning system is to reduce the amount of water vapor in the gas, limit the maximum concentration of turpentine in the NCG from softwood processing, and address conditions that can generate flammable gas compositions for any fiber source.

While chip bin vent condenser temperature control is primarily aimed at limiting the saturated turpentine concentration of the exit vapor, temperature will have less impact on TRS content. Operating the chip bin at temperatures > 180 º F with flash steam increases the risk of having flammable concentrations of CBNCG due to TRS, even after cooling. Interlock permissives should include limits on chip bin condenser NCG exit temperature. A maximum cooled gas temperature of 90 º F is suggested for softwood cooking; however, the maximum temperature setting for hardwood could be set higher 120 º F would not be unreasonable. In softwood systems that cannot be cooled to 90 º F, sufficient dilution should be added to ensure the gases remain below the LEL. If dilution air is added to lower combustible gas concentrations, it should be introduced after the condenser to reduce the impact on condensing efficiency. LEL monitor usage is discussed in section 8.4.

Since the chip bin vent will often entrain chips, pins, and fines, the vent condenser should be protected from plugging. Systems will often include a separator and an intermittent tube-side shower.

Pre-steaming chip bins should have process interlocks to vent the chip bin to the atmosphere under prolonged low chip bin level conditions or excessive vent Condenser temperatures. Flash steam should be shut off as a pre-emptive action before excessive emissions are released into the collection system. [The flash steam valve should be ramped down at a rate that does not create a control problem for the flash steam condensers.]

Pre-steaming chip bins that operate at cold top temperatures can accumulate high concentrations of TRS and condensed volatiles that can re-vaporize under falling chip levels that result in steam breakthrough. Chip bins that normally operate hot (top temperature of > 150º F) may experience accumulation of TRS and condensed volatiles upon loss in steam flow. These combustibles can be rapidly expelled upon resumption of steaming. To avoid this potential excursion above the LEL, a low bin vent temperature interlock should be included that vents NCG for a minimum time period once conditions return to normal with rising temperature.

Appropriate pre-emptive interlocks recognizing this behavior should be applied to any operating strategy. Figure 21 gives an example of a CBNCG vent condensing system.

8.2.2 Recovery Boiler Introduction System

CBNCG can be introduced for thermal oxidation into the recovery boiler furnace in several ways:

- Through one or more injection nozzles, typically located within a combustion air (tertiary) port entry.
- As part of a dedicated burner for CNCG and SOG
- Combined with DNCG prior to furnace entry

The selected method of introduction of the CBNCG into the furnace needs to consider the gas concentration at the point of injection, the volume of CBNCG and the applicable risk factors. The designer selecting a system to introduce CBNCG into a combustion air duct should recognize the potential for release of odorous and potentially flammable gas into the boiler area due to ductwork leaks, port rodding leakage, sight glass breakage or other leakage sites. A system design that uses direct injection into the furnace through dedicated nozzles or as a stream to a dedicated waste gas burner significantly reduces the possibility of odorous gas release and is the preferred method of disposal. Furthermore, a dedicated system that uses a steam ejector provides safety when the CBNCG combustibles are above the LEL because it does not have the potential ignition sources of a centrifugal fan and steam addition provides dilution of both combustible gas and oxygen concentrations.

Dilution air added to CBNCG will not positively ensure that the resulting stream is always below the LEL. Some risk factors involve re-vaporizing combustibles; and the rate of re-vaporization cannot be accurately predicted, so the resulting concentration, even after dilution, cannot be predicted.

Data from mills indicate that the % LEL of their DNCG systems without the chip bin vent is typically 5% - 10%. When chip bin gases are included, this % LEL can go much higher and exceed 100%. In that the chip bin, when upset, represents the single most likely source of NCG that can jeopardize the safety of a conventional DNCG system, more mills are electing to handle this vent gas separately.

Before selecting CBNCG transport and introduction methods, a “management of change” procedure should be performed. If the” management of change” procedure and evaluation of risk factors allow combining CBNCG with DNCG, then Chapter 4 should be used for design of a recovery boiler introduction system. The remainder of this chapter discusses introduction of CBNCG into the recovery furnace in a dedicated system.

Depending on method of collection, CBNCG replaces a small part of the volume of combustion air. If conveyed by a steam ejector, NCG flow excluding ejector steam is typically less than 2000 acfm. If conveyed by a fan, where dilution air is added, total flow will typically be in the 4000 acfm range. These flows may have an effect on the combustion air requirements and should be considered in the system design.

Where direct injection through a nozzle is used, entry velocities should be above the flame propagation velocity to minimize the potential for flame blowback. A reasonable design velocity is 50 fps. The delivery system should be designed to develop the necessary pressure required at the furnace nozzles, in which case CBNCG pressure should be monitored and alarmed.

When NCG is diverted, providing a secondary source of air or steam will help prevent injection port damage from high heat exposure.

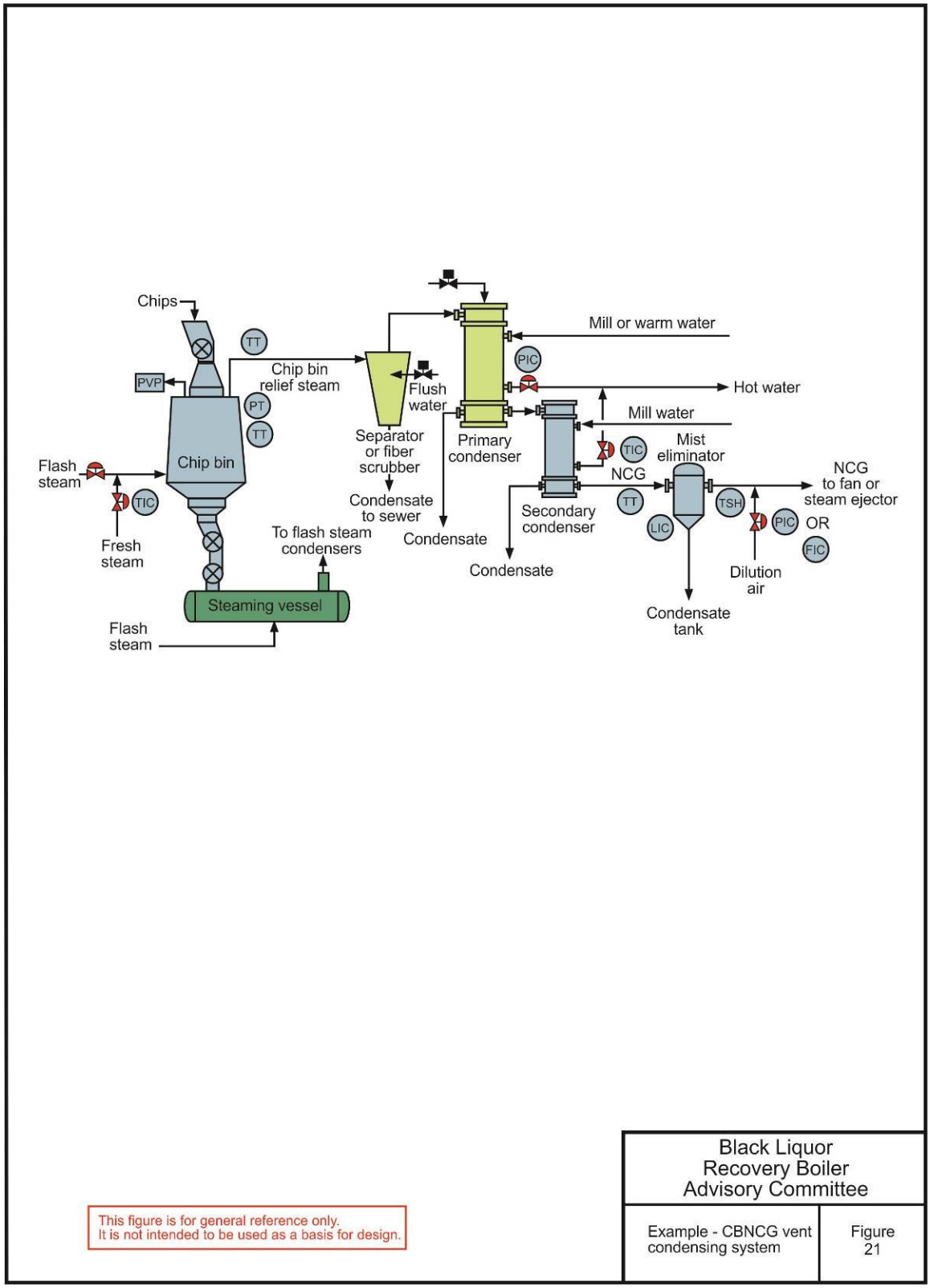

Figure 21 Example - CBNCG vent condensing system.

8.2.3 Chip Bin NCG Transfer System

Mills may elect to transfer CBNCG using a spark-resistant fan as is typically employed for conventional DNCG systems; however, continuous monitoring of % LEL is recommended if risk factors indicate a high likelihood of generating flammable gas concentrations during upset conditions. Particular attention should be given to ensure that the casing and shaft are well-grounded, and that frequent or continuous vibration monitoring is performed to minimize the risk of the Fan becoming a source of ignition.

A steam ejector is recommended for systems where the possibility of developing flammable gas concentrations is high. Potential ignition by the centrifugal fan is avoided. The ejector steam, as with CNCG systems, serves to dilute both the flammable gas concentration as well as the oxygen.

The relative volume of a separately handled chip bin vent collection system, whether conveyed by steam ejector or by fan, however, is considerably smaller than typical DNCG systems and affords added flexibility with disposal in the recovery boiler. Pre-heating is, therefore, not a requirement. Figures 22 and 23 show typical fan and steam ejector delivery systems.

Steam Ejector systems - Steam-ejected CBNCG can be added to the same burner as that used for burning CNCG and SOG, by adding another annulus.

Advantages:

- Provides steam dilution of both oxygen and NCG concentration
- Steam vs Electrical when energy cost is favorable
- May provide a flame quenching point
- No moving parts
- Offers no source of ignition

Disadvantages:

- Steam consumption
- Contributes moisture to point of incineration [Condensing Ejector steam results in losing several key advantages regarding NCG flammability.]
- High pressure steam needs to be below auto-ignition point of 400F.
- Discharge pressure protection is required.

The NCG may also be injected directly into the boiler at high velocity (e.g., > 50 fps) through one or two tertiary ports.

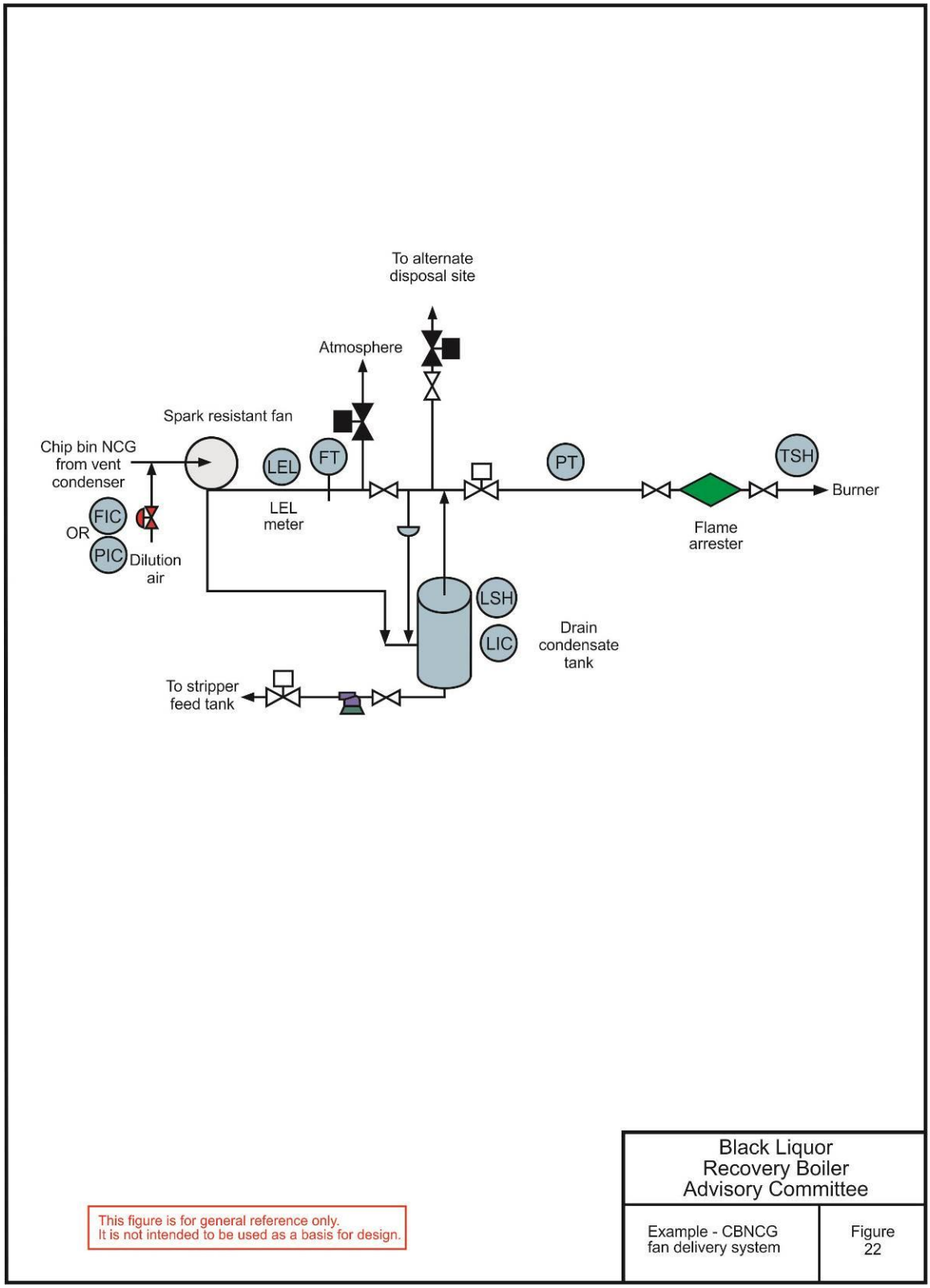

Figure 22 Example - CBNCG fan delivery system.

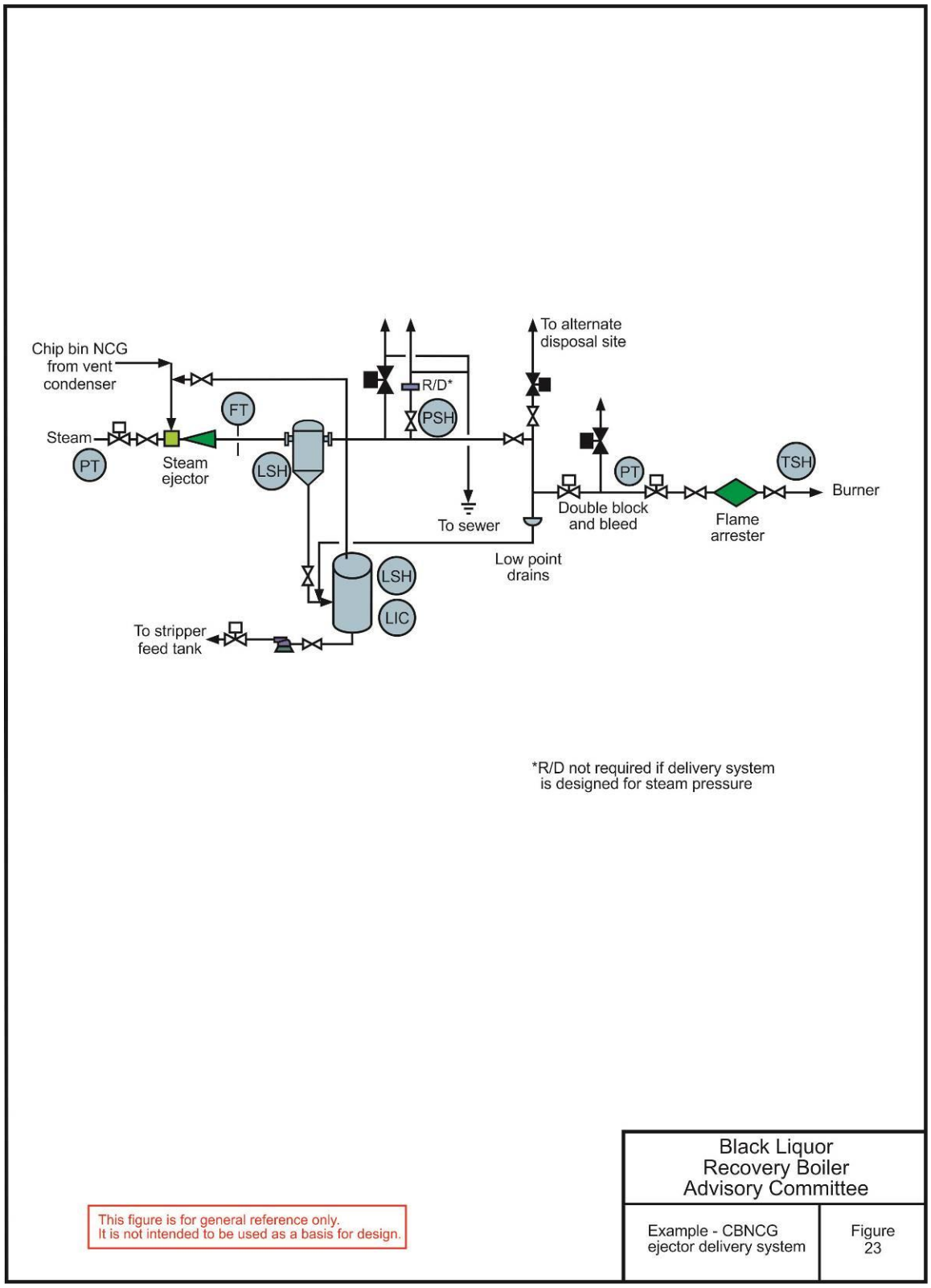

Figure 23 Example - CBNCG ejector delivery system.

Fan systems – Fan conveyed CBNCG may be handled similarly in that the CNCG burner requirement for combustion air can be satisfied by the chip bin flow. Use of an auxiliary combustion air supply would still be required should the chip bin flow be diverted.

Advantages:

- Dry delivery of NCG to incineration
- Electrical vs steam when energy cost is favorable
- Discharge pressures are not potentially high – no pressure relief device to maintain

Disadvantages:

- Can be a source of ignition
    - Foreign material
    - Mechanical failure (worn bearing)
    - Inadequate grounding (case or shaft)
- Additional air is typically required for balancing
- Unless fresh steam is used, an LEL meter is recommended.
- Added number of interlocks
- Increased frequency of venting likely

Fan Design Considerations

- Spark-resistant metallurgy (typically Monel) at potential contact points.
- Fan and shaft grounding with periodic confirmation
- Continuous bearing temperature monitoring
- Continuous vibration monitoring
- Condensate draining provisions
- Provide dilution ahead of the fan, but after the vent condenser.
- Provide an LEL meter after the fan with sample probe protected from entrained condensate.

This NCG flow may also be introduced directly into the boiler at high velocity (e.g., > 50 fps) through one or two separate ports.

8.2.4 CBNCG Piping System and Auxiliary Equipment

Gas piping should be designed to prevent accumulation of condensates. Where possible, piping should be sloped in the direction of gas flow to facilitate draining and to minimize accumulation of tar deposits.

Gas piping should be grounded at several locations along the collection system.

For fan-based systems, refer to Section 4.2.5 covering DNCG piping; for steam ejector-based systems, refer to Section 5.2.3 covering CNCG piping.

Separate condensate collection systems are preferred; however, CBNCG and DNCG systems may share common condensate drain collection tanks **except** where upset

pressure differences can interfere with system operation or the integrity of lockout/tagout procedures is compromised.

8.3 Monitoring and Control

Monitoring and control of the CBNCG system should include indication and response to upset chip bin operation. Fan-based delivery systems present the greatest risk for fire and explosions unless adequate interlock protection is provided.

Monitoring should include indication of low chip bin level, abnormally high upper chip bin temperature; lower than normal upper chip bin temperature and high vent condenser NCG temperature. Fan-based systems that transport CBNCG from flash steam pre-steaming or wood species that contain volatile oils are subject to higher risk of developing flammable NCG conditions. LEL monitoring should be seriously considered as well as frequent/continuous monitoring of fan vibration and bearing temperature.

8.4 Safety System

CBNCG is not considered a fuel. It is considered as "malodorous air" for fan-delivered systems that include added dilution air. Steam-ejected delivery systems will generally transport only the air that enters the chip bin and that air's contribution to combustion air requirements, in a properly designed and operated system, will likely be small.

Since upsets at the chip bin are primarily responsible for conditions that affect the flammability and hazardous nature of CBNCG, process stability is reflected in the logic for burning CBNCG in the recovery boiler.

An LEL meter is not required, but use of an LEL meter can provide a more accurate indication of combustible content than surrogate parameters. All interlocks must be included but an LEL meter that is calibrated and operating properly can be functionally substituted for the surrogate parameters in the tripping logic.

For either method of delivery, direct injection is preferred at nozzle velocities > 50 fps.

8.4.1 Permissive Starting Logic – CBNCG – Fan Delivery

To admit CBNCG to the recovery boiler, the following conditions should be fulfilled:

- Purge credit established and maintained
- Steam flow is above 30% of MCR
- Drain collection tank levels not high
- CBNCG flow is proven*
- Fan vibration levels not high
- Chip bin level not low**
- Chip bin top temperature not high**
- Chip bin top temperature not low**

- Percent LEL not high (if used)
- CBNCG temperature after vent condenser not high**
- CBNCG delivery pressure not low
- CBNCG delivery pressure not high

Permissive starting logic for thermal oxidation of CBNCG is shown in Figure 24.

8.4.2 Protective Tripping Logic – CBNCG – Fan Delivery

Any of the following conditions will divert CBNCG from the recovery boiler:

- Master fuel trip (purge credit lost)
- CBNCG pressure low or high
- CBNCG flow low*
- Gas temperature after chip bin vent condenser high**
- Chip Bin top temperature increasing after being low**
- CBNCG temperature at nozzle high
- CBNCG fan vibration level high
- Percent LEL high (if used)
- Boiler steam flow less than 30% of MCR
- Shut-off valve to alternative control device not closed (if applicable)
- Automatic vent valve not closed.
- Drain collection tank level high
- Manual switch to vent valve activated

Protective tripping logic for thermal oxidation of CBNCG is shown in Figure 25.

* Flow can be proven with pressure, flow, temperature, fan operating and control damper position (fan operation should be proven with shaft speed), or other means. Note that pressure alone could indicate pluggage rather than flow.

**Interlocks typically part of digester controls.

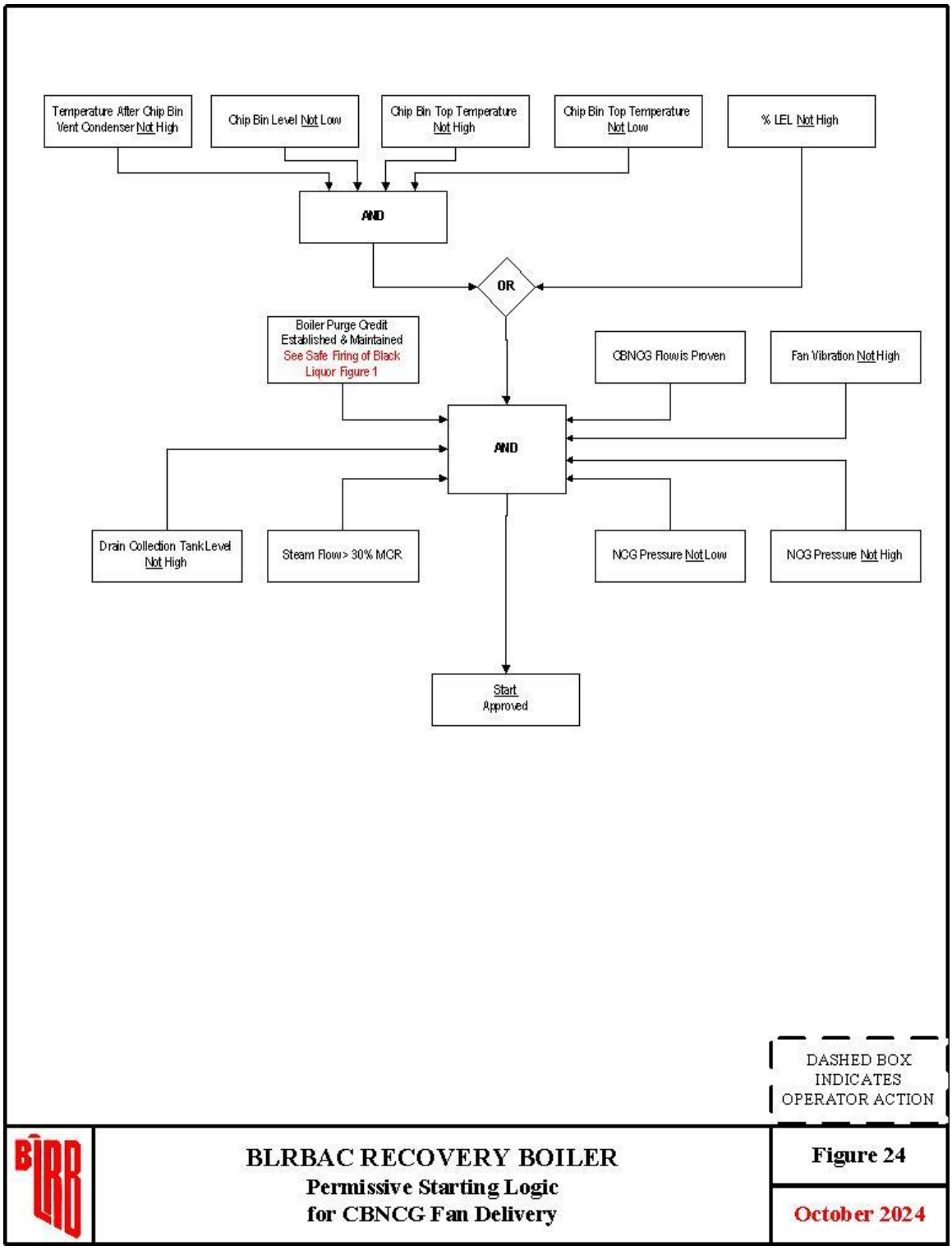

Figure 24 CBNCG Fan Delivery Permissive Starting Logic.

Table 11 Explanation Chart for CBNCG Injection Permissive Starting Logic - Fan Delivery for Figure 24

LOGIC BLOCK	PURPOSE	HAZARD PROTECTED
Boiler Purge Credit Maintained (From Figure 21 'Common Permissive Starting Logic' in Safe Firing of Auxiliary Fuel Recommended Good Practice)	Stop DNCG introduction when boiler firing permissives not met	Prevent introduction of DNCG while boiler is not being fired.
Steam Flow >30% MCR	Ensure furnace combustion is stable.	Unstable operation of boiler may minimize furnace residence time or provide too low a temperature for proper oxidation.
Drain Collection Tank levels not high.	Prevent condensate from flooding NCG duct.	Prevent condensate from entering boiler.
CBNCG flow established*	Ensure sufficient motive force and dilution	Provide minimum line and nozzle entry velocity to prevent flame propagation
Fan vibration levels not high	Indicates potential spark generation	Prevent ignition of flammable gas
Chip Bin level not low**	Indicates potential breakthrough of flammable gas	Prevent NCG from exceeding 100% LEL with explosion hazard
Chip Bin top temperature not high**	Possible breakthrough of flammable gas	Prevent NCG from exceeding 100% LEL
Chip Bin top temperature, not low**	Avoid a surge of revaporized flammable gas as chip bin warms up	Prevent CBNCG from becoming explosive
CBNCG after Vent Condenser not high**	Ensure adequate condensing of terpenes	Prevent NCG from exceeding 100% LEL
% LEL not high**	Indicates gas is not flammable	Prevent injection of flammable gas
CBNCG delivery pressure not low	Ensure sufficient motive force	Provide minimum line and nozzle entry velocity to prevent flame propagation
CBNCG delivery pressure not high	System is not plugged or flooded	Provide minimum line and nozzle entry velocity to prevent flame propagation. Prevent blowing loop seals and rupture discs.
Start Approval	Start permissive after satisfying interlocks	Interlocks made.

* Flow can be proven with flow indication or surrogate measures, including fan shaft speed.
** Typically part of Digester interlock controls and not part of boiler permissives

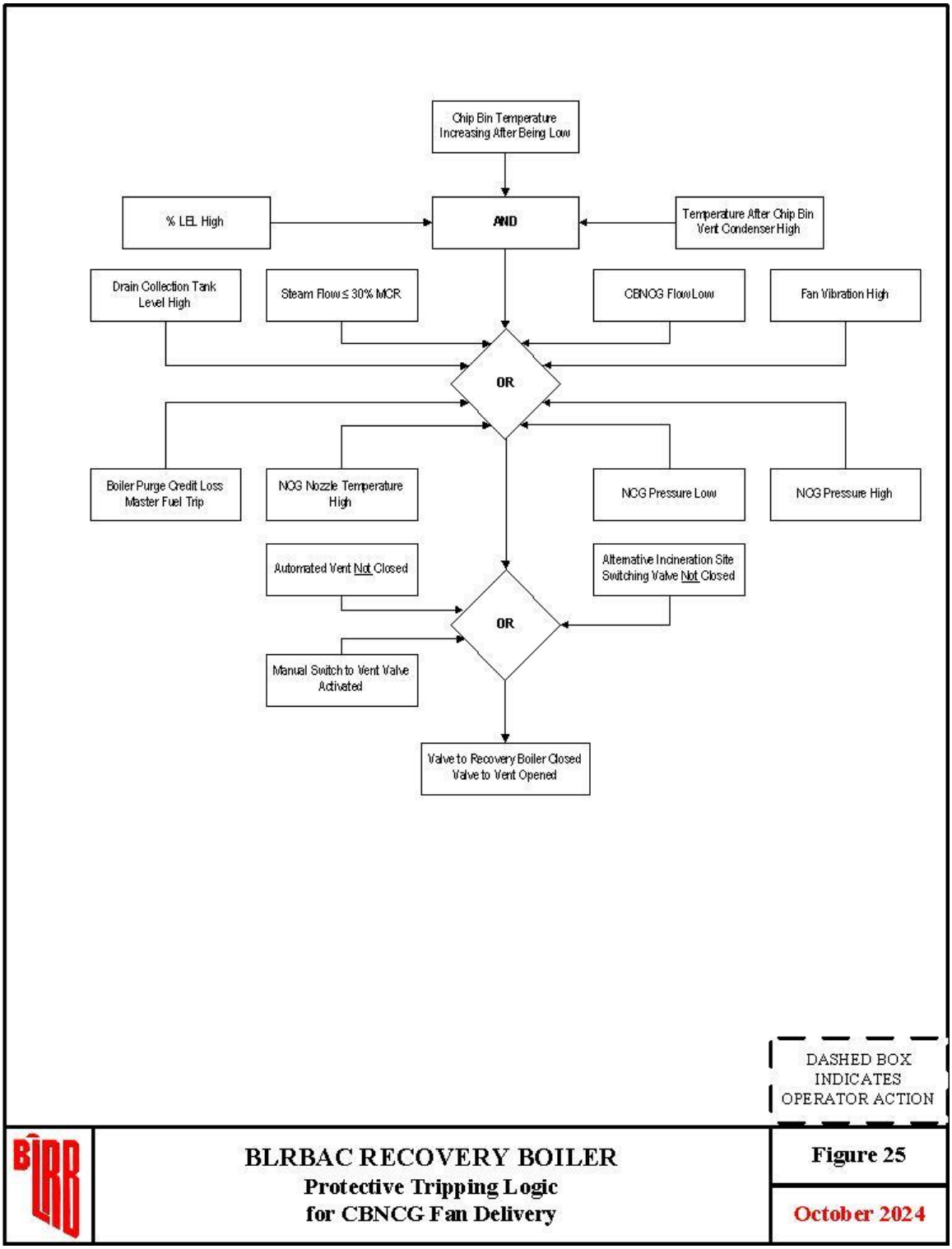

Figure 25 CBNCG Fan Delivery Tripping Logic.

Table 12 Explanation Chart for CBNCG Injection Protective Tripping Logic - Fan Delivery for Figure 25

LOGIC BLOCK	PURPOSE	HAZARD PROTECTED
Boiler Purge Credit Lost Master Fuel Trip (From Figure 21 'Common Permissive Starting Logic' in Safe Firing of Auxiliary Fuel Recommended Good Practice)	Stop DNCG introduction when boiler firing permissives not met	Prevent introduction of DNCG while boiler is not being fired.
Steam Flow <30% MCR	Furnace combustion may be unstable.	Unstable operation of boiler may minimize furnace residence time or provide too low a temperature for proper oxidation.
Drain Collection Tank levels high.	Condensate may be flooding NCG duct.	Prevent condensate from entering boiler.
CBNCG flow low*	Ensure sufficient motive force	Provide minimum line and nozzle entry velocity to prevent flame propagation
Fan vibration levels high	Indicates potential spark generation	Prevent ignition of flammable gas
Chip Bin level low**	Indicates potential breakthrough of flammable gas	Prevent NCG from exceeding 100% LEL with explosion hazard
Chip Bin top temperature high**	Possible breakthrough of flammable gas	Prevent NCG from exceeding 100% LEL
Chip Bin top temperature increasing after being low**	Avoid a surge of revaporized flammable gas as chip bin warms up	Prevent CBNCG from becoming explosive
CBNCG after Vent Condenser high**	Possible inadequate condensing of terpenes	Prevent NCG from exceeding 100% LEL
% LEL high**	Indicates gas may be flammable	Prevent injection of flammable gas
CBNCG delivery pressure low	insufficient motive force or dilution	Provide minimum line and nozzle entry velocity to prevent flame propagation
CBNCG delivery pressure high	System may be plugged or flooded	Provide minimum line and nozzle entry velocity to prevent flame propagation. Prevent blowing loop seals and rupture discs.

(continued)

Table 12. (cont'd) Explanation Chart for CBNCG Injection Protective Tripping Logic – Fan Delivery for Figure 25

LOGIC BLOCK	PURPOSE	HAZARD PROTECTED
NCG Nozzle temperature high	Indicate flameback	Prevent explosion in line
Manual switch to vent valve activated	Remove foul gas from boiler	Boiler conditions such that continued NCG delivery creates an unsafe condition.
Automated vent valve not closed	Confirm valves in proper Position to prevent flow to more than one location	Provide minimum line and nozzle entry velocity to prevent flame propagation.
Valves to alternate location not closed	Confirm valves in proper Position to prevent flow to more than one location	Provide minimum line and nozzle entry velocity to prevent flame propagation.

* Flow can be proven with flow indication or surrogate measures, including fan shaft speed.
** Typically part of Digester interlock controls and not part of boiler permissives

8.4.3 Permissive Starting Logic – CBNCG – Steam Ejector Delivery

To admit CBNCG to the Recovery Boiler, the following conditions should be fulfilled:

- Purge credit established and maintained
- Steam flow is above 30% of MCR
- Drain Collection Tank levels not high
- Ejector steam or discharge flow not low
- Chip Bin level not low*
- Chip Bin top temperature not high*
- Chip Bin top temperature not low*
- %LEL not high (if used)*
- CBNCG temperature after Vent Condenser not high*
- CBNCG delivery pressure not low
- CBNCG delivery pressure not high

Permissive starting logic for thermal oxidation of CBNCG is shown in Figure 24.

8.4.4 Protective Tripping Logic – CBNCG – Steam Ejector Delivery

Any of the following conditions will divert CBNCG from the Recovery Boiler:

- Master Fuel Trip (purge credit lost)
- CBNCG delivery pressure low
- CBNCG delivery pressure high
- Drain Collection Tank level high
- CBNCG Ejector steam or discharge flow low
- CBNCG temperature at nozzle high
- Gas temperature after Chip Bin Vent Condenser high*
- Chip Bin top temperature increasing after being low*
- %LEL high (if used)*
- Boiler steam flow less than 30% of MCR
- Shut-off valve to alternative control device not closed (if applicable)
- Automatic vent valve not closed.
- Manual switch to vent valve activated

* Consider these as Digester source interlocks or alarms, but not permissives for the Boiler.

Protective tripping logic for thermal oxidation of CBNCG is shown in Figure 25.

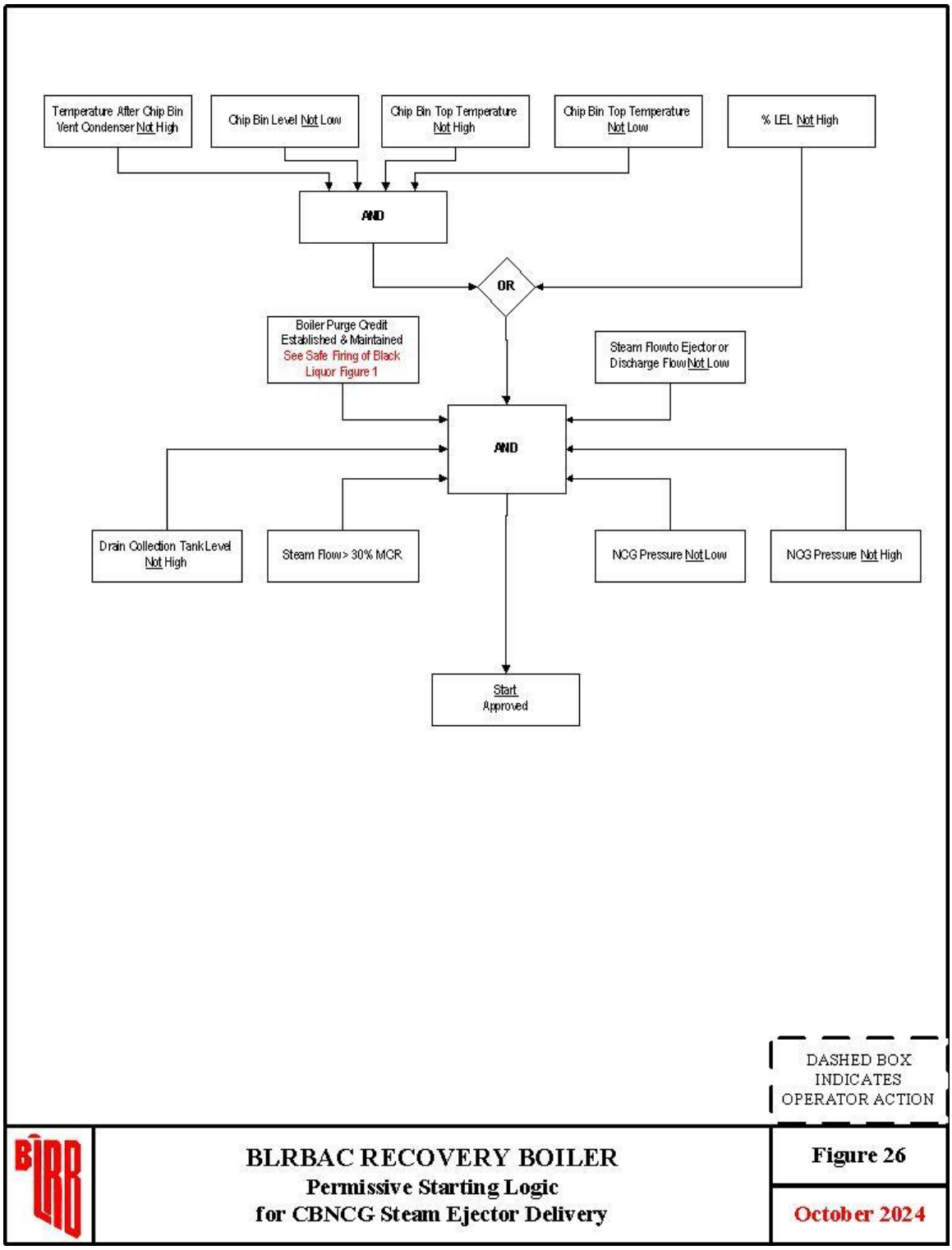

Figure 26 CBNCG Steam Ejector Delivery Permissive Starting Logic.

Table 13 Explanation Chart for CBNCG Injection Permissive Starting Logic - Steam Ejector Delivery for Figure 26

LOGIC BLOCK	PURPOSE	HAZARD PROTECTED
Boiler Purge Credit Maintained (From Figure 21 'Common Permissive Starting Logic' in Safe Firing of Auxiliary Fuel Recommended Good Practice)	Stop DNCG introduction when boiler firing permissives not met	Prevent introduction of DNCG while boiler is not being fired.
Steam Flow >30% MCR	Ensure furnace combustion is stable.	Unstable operation of boiler may minimize furnace residence time or provide too low a temperature for proper oxidation.
Drain Collection Tank levels not high.	Prevent condensate from flooding NCG duct.	Prevent condensate from entering boiler.
Ejector Steam flow or discharge flow not low	Ensure minimum line velocity and gas dilution	Provide minimum line and nozzle entry velocity to prevent flame propagation.
Chip Bin level not low**	Indicates potential breakthrough of flammable gas	Prevent NCG from exceeding 100% LEL with explosion hazard
Chip Bin top temperature not high**	Possible breakthrough of flammable gas	Prevent NCG from exceeding 100% LEL
Chip Bin top temperature not low**	Avoid a surge of revaporized flammable gas as chip bin warms up	Prevent CBCG from becoming explosive
CBNCG after Vent Condenser not high**	Ensure adequate condensing of terpenes	Prevent NCG from exceeding 100% LEL
% LEL not high**	Indicates gas is not flammable	Prevent injection of flammable gas
CBNCG delivery pressure not low	Ensure sufficient motive force	Provide minimum line and nozzle entry velocity to prevent flame propagation
CBNCG delivery pressure not high	System is not plugged or flooded	Provide minimum line and nozzle entry velocity to prevent flame propagation. Prevent blowing loop seals and rupture discs.
Start Approval	Start permissive after satisfying interlocks	Interlocks made.

* Flow can be proven with flow indication or surrogate measures, including fan shaft speed.
** Typically part of Digester interlock controls and not part of boiler permissives

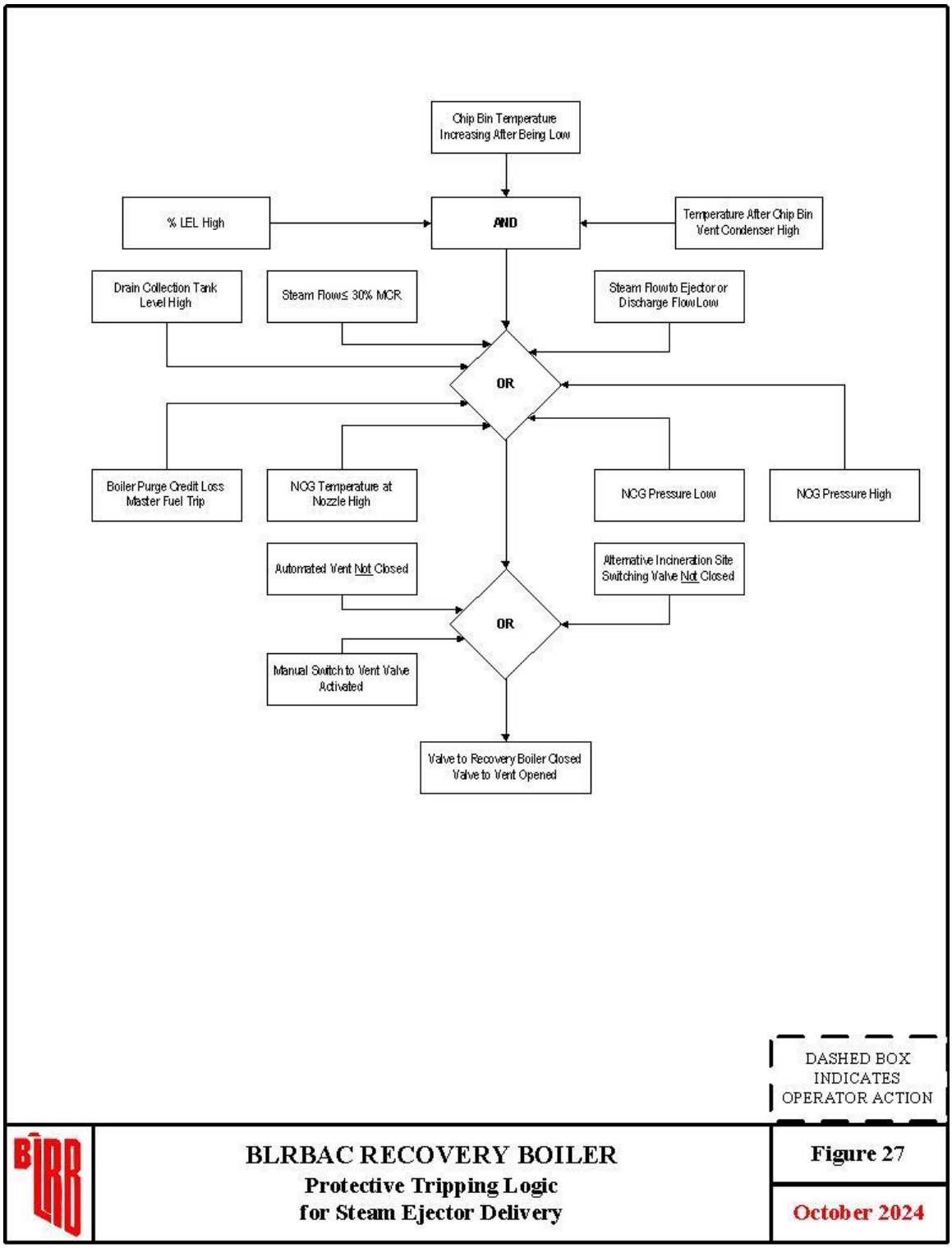

Figure 27 CBNCG Steam Ejector Delivery Tripping Logic.

Table 14 Explanation Chart for CBNCG Injection Protective Tripping Logic - Steam Ejector Delivery for Figure 27

LOGIC BLOCK	PURPOSE	HAZARD PROTECTED
Boiler Purge Credit Lost Master Fuel Trip (From Figure 21 'Common Permissive Starting Logic' in Safe Firing of Auxiliary Fuel Recommended Good Practice)	Stop DNCG introduction when boiler firing permissives not met	Prevent introduction of DNCG while boiler is not being fired.
Steam Flow <30% MCR	Furnace combustion may be unstable.	Unstable operation of boiler may minimize furnace residence time or provide too low a temperature for proper oxidation.
Drain Collection Tank levels high.	Condensate may be flooding NCG duct.	Prevent condensate from entering boiler.
Ejector Steam flow or discharge flow low	Loss of motive force, line velocity and gas dilution	Provide minimum line and nozzle entry velocity to prevent flame propagation.
Chip Bin top temperature increasing after being low**	Avoid a surge of revaporized flammable gas as chip bin warms up	Prevent CBNCG from becoming explosive
CBNCG after Vent Condenser high**	Possible inadequate condensing of terpenes	Prevent NCG from exceeding 100% LEL
% LEL high**	Indicates gas may be flammable	Prevent injection of flammable gas
CBNCG delivery pressure low	Insufficient motive force	Provide minimum line and nozzle entry velocity to prevent flame propagation
CBNCG delivery pressure high	System may be plugged or flooded	Provide minimum line and nozzle entry velocity to prevent flame propagation. Prevent blowing loop seals and rupture discs.
NCG Nozzle temperature high	Indicate flameback	Prevent explosion in line
Manual switch to vent valve activated	Remove foul gas from boiler	Boiler conditions such that continued NCG delivery creates an unsafe condition.

(continued)

Table 14. (cont'd) Explanation Chart for CBNCG Injection Protective Tripping Logic – Steam Ejector Delivery for Figure 27

Automated vent valve not closed	Confirm valves in proper Position to prevent flow to more than one location	Provide minimum line and nozzle entry velocity to prevent flame propagation.
Valves to alternate location not closed	Confirm valves in proper Position to prevent flow to more than one location	Provide minimum line and nozzle entry velocity to prevent flame propagation.

* Flow can be proven with flow indication or surrogate measures, including fan shaft speed.
** Typically part of Digester interlock controls and not part of boiler permissives

8.5 Personnel Safety

Characteristics for CBNCG and personnel safety considerations are described in Sections 4.5 for DNCG and 5.5 for CNCG.

APPENDIX A DOCUMENT REVISION HISTORY

October 2026

1. Chapter 6
    a. Revision: Added wording explaining need for thorough soap mixing
    b. Revision: Added wording recommending in-line mixing of soap upstream of ringheader supply pumps
    c. Revision: Paragraph explanation of potential issues related to soap injection with boilers that recirculate liquor from ringheader back to storage tanks.
    d. Added: Paragraph recommending soap ratio control and maximum soap to liquor ratio with OEM reference.
    e. Added: Automated isolation valves to be shut during recirculation.
    f. Added: Recommendation for design plan to clean system.
    g. Revision: Added and replaced verbiage in risks related to Flow, Tankage, and Combustion topics.
    h. Added: Figure 13, soap burning diagram.
2. Chapter 8
    a. Added provision for dilution of softwood gases that cannot be cooled to 120F target.

October 2024

All figures and diagrams were reformatted using the same software. No changes to the substance of the document were made.

October 2021

1. Chapter 3
    a. Turpentine propagation speed changed from 505 fps to 2.0 fps per TAPPI Tip 0416-09
2. Chapter 4
    a. Figure 4 updated and reformatted
    b. Added subsection 4.2.4 for BLOX tank vent handling.
    c. Added subsection 4.2.5 for CTO reactor sources handling
    d. Modification: air dampers and system vents are to be *open* during an ESP.
    e. Updated bullet sections in 4.2.4 and 4.2.5 to include corrected references to double block and bleed, either manual or automatic.
3. Chapter 5
    a. Figure 5 updated and reformatted

April 2018

1. General
    a. Replaced switches with transmitters in diagrams where applicable.
    b. Edited associated wording in document to replace switches with transmitters where applicable.
2. Chapter 4
    a. Dissolving tank vent gas (DTVG) section expanded with seal and drain design suggestions added.
3. Chapter 6
    a. Modification: The 1% methanol limit as a ratio of liquor was clarified in the document by replacing "methanol solution" with "pure methanol".
    b. Added cautionary verbiage in methanol and turpentine sections regarding inspection of tanks which may have contained explosive liquids.
    c. Added a note to adhere to local regulations when venting to the atmosphere from the ash mix tank in both the methanol and turpentine sections.

<u>October 2015</u>

1. General
    a. Corrected miscellaneous typographical errors throughout the document.
    b. Updated general descriptions of sources and their components.
    c. Updated use of LEL and UEL references throughout document to adhere to definition by NFPA
2. Chapter 5
    a. Eliminated paragraph 5.2.1.2 and references to seal pots used as a conditioning device.
    b. Revised lists of recommended system components to be placed inside versus outside of recovery boiler area.
    c. Edited the continuous igniter paragraph and defined the permissive and interlock for the use of the igniter
    d. Added continuous igniter reference in tables 5, 6 and 7 as well as figures 8, 9, and 10.

<u>February 2012</u>

"Notice of Disclaimer of Liability" was added to page 2.

<u>October 2010</u>

1. Foreword: Deleted in its entirety. A portion was adapted for inclusion in Chapter 1.
2. Chapter 1
    a. Editorial/non-technical changes.
    b. The paragraph stating BLRBAC discourages the burning of waste streams in recovery boilers has been deleted.
3. Chapter 2: Numerous definitions added, deleted, or revised.

4. Chapter 3: Primarily editorial with changes to distinguish SOG form other CNCG waste streams and to accommodate the addition of liquid waste stream incineration in the scope of the document.
5. Chapter 4:
    a. Guidelines for idle DNCG line has been added along with other primarily editorial changes.
    b. Deleted unnecessary logic blocks after "START Approval" in Figure 2, DNCG Permissive Starting Logic.
6. Chapter 5: Primarily editorial changes and:
    a. Clarification on the location of flame arrestors in CNCG and SOG lines
    b. Explanation for recommendation to keep SOG separate from other CNCG
    c. Corrections to Tables 6 and 7 to match the logic blocks in their respective figures.
    d. Fig. 5: Terminology changed from "LP Steam" to "Purge Steam" and "MP Steam" to "Ejector Steam". Also revised to show automatic vent line coming off top CNCG and SOG supply lines.
    e. Fig. 6: Flame arrestor location in CNCG and SOG lines moved for consistency with text. Also revised to show automatic vent lines coming off top CNCG and SOG supply lines.
7. Chapter 6: Section 6.7 has been completely rewritten to provide guidelines on the blending of turpentine and red oil into the black liquor. New Figures 19 and 20 have been added for permissive starting and tripping interlock logic for turpentine. (Subsequent figures renumbered accordingly.) Other editorial changes were made in earlier sections of the chapter for consistency with section 6.7.

<u>October 2008</u>

- Chapter 5 revised to address purging of the portion of the CNCG supply line to the recovery boiler between the final/most downstream shutoff valve and the burner.

- Added a new chapter 8, Guidelines for Thermal Oxidation of Chip Bin NCG and revised Chapter 4 to delete guidance on the incineration of chip bin NCGs.

<u>April 2008</u>

- Chapter 4, Guidelines for Thermal Oxidation of DNCG
    - Added guidelines for the safe incineration of recovery boiler dissolving tank vent gases that include a recommendation for handling dissolving tank vent gases independently of any other NCG system. This material is dispersed throughout the chapter as needed in each of the sections including modifications to Figures 2 and 3 and their associated logic explanation charts and the addition of a new Figure 4, DNCG Transfer System for Dissolving Tank Vent.
    - Section 4.2.4, DNCG Transfer System:
        - Added a recommendation that the entire transport system be grounded.
        - Modified the low point drain recommendation to specifically recommend the fan casing have a condensate outlet at its lowest point.

        - Added a recommendation for high and low temperature alarms for gas condensers/preheaters.
        - Clarified DNCG gas temperature conditioning equipment.
        - Added a recommendation that all vent lines for DNCG systems be routed to a safe location.
    - Section 4.2.5, DNCG Piping System and Auxiliary Equipment:
        - Added a recommendation for sloped piping with a low point drain.
        - Added a recommendation that position switches on automatic valves provide feedback to a manned control room.
    - Section 4.3, Monitoring and Control
        - Added a recommendation for routine monitoring of bearing temperature and vibration.
        - Added recommended maximum design % LEL values with and without automatic interlocks.
    - In the logic explanation table for Figure 3, the "Purpose" and "Hazard Protected" were added for the "Switch DNCG from boiler to vent" Logic Block.

- Added a new Chapter 7, Guidelines for Thermal Oxidation of Liquid Waste Streams in Dedicated Burners.

<u>October 2006</u>

- Section 4.2.2 – Changed "vented to atmosphere" to "diverted."
- Section 4.2.3
    - Added "relative" to text so as to read: "50% relative humidity."
    - Added explanation for recommended double block and vent.
- Sections 4.4.1 & 4.4.2, Figure 2 and accompanying Logic Explanation Chart, and Figure 3 and accompanying Logic Explanation Chart – Permissive starting logic and protective tripping logic modified to recognize a variety of means are available to detect DNCG flow.
- Section 5.1.3 – Igniter design recommendation for waste stream burner modified to specifically refer to NFPA class 1 continuous igniters.
- Section 5.2.3 – Removed reference to specific piping design codes and added that piping must meet the required service conditions and be acceptable to the authorities having jurisdiction.
- Added Chapter 6, *Liquid Waste Streams Blended with Black Liquor*

<u>April 2002</u>

This document has been revised to provide a consistent format. With the exception of an added sentence in Section 4.2.1, there are no technical changes from the prior issue.

<u>October 1999</u>

First issue.